Not all type approval numbers are final !

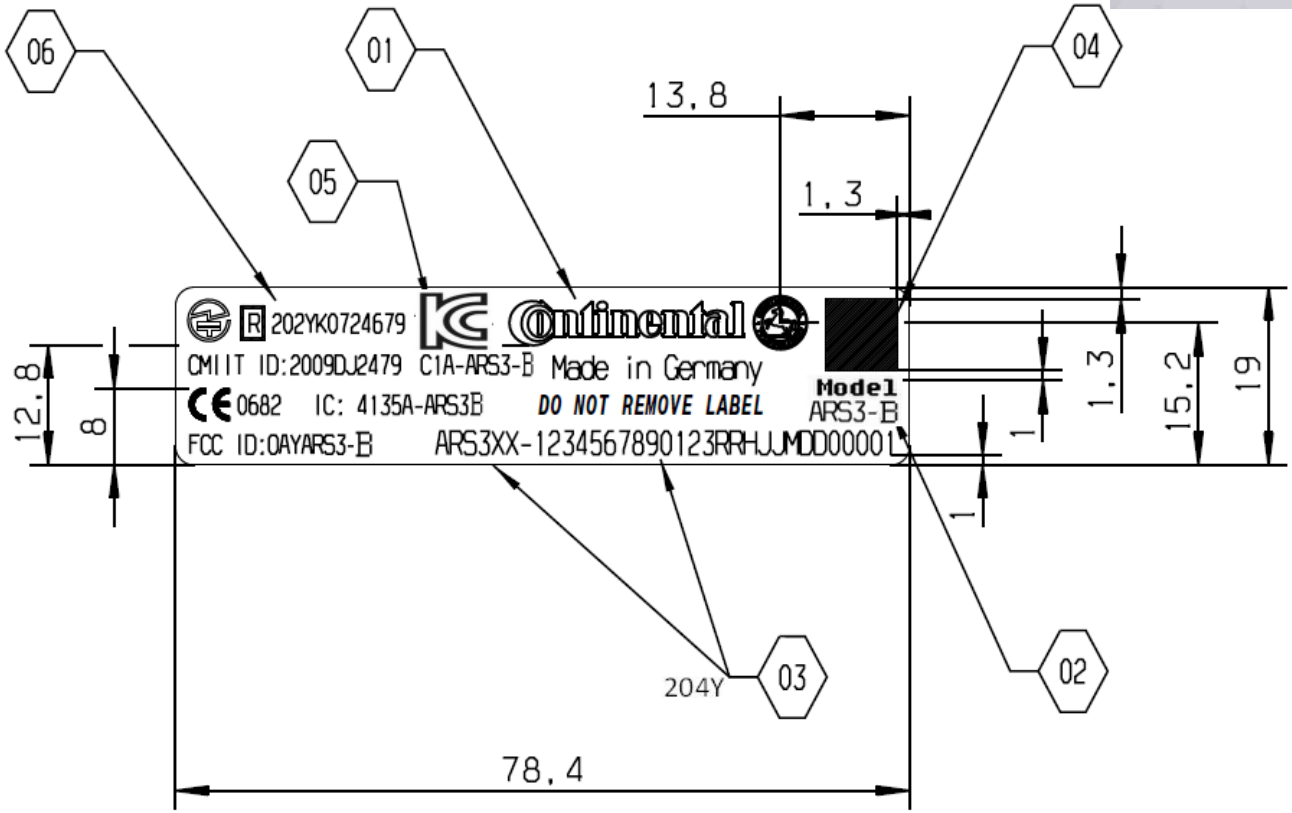

	NOTES
01	CONTINENTAL LOGO
02	TYPE-NO.
03	TEMIC PRODUCTION-NR TYPE SIZE: 3 DIN 1451 EXPLANATION: ARS3XX CUSTOMER TYPE_NO. 1234567890123: SAP-NR RR: NUMBER OF REVISION H: FACTORY JJ: YEAR OF PRODUCTION M: MONTH OF PRODUCTION DD: DAY OF PRODUCTION 00001: CONSECUTIVE NUMBER PER DAY OF PROD.
04	DATA MATRIX CODE SIZE 7.62mm X 7.62mm; FOLLOWING ISO/IEC 16022:2000, CODESCHEME ECC200, ACCURACY 15 MIL; CODE-CONTENTS: SEE PART HISTORY
05	COUNTRY OF ORIGIN TYPE SIZE: 3 DIN 1451
06	RADIO CERTIFICATIONS
07	RECOMMENDED INKED RIBBON: TTRC COLOUR: LETTERING BLACK (RAL 9005)

Copyright © by Continental 2010
All rights reserved