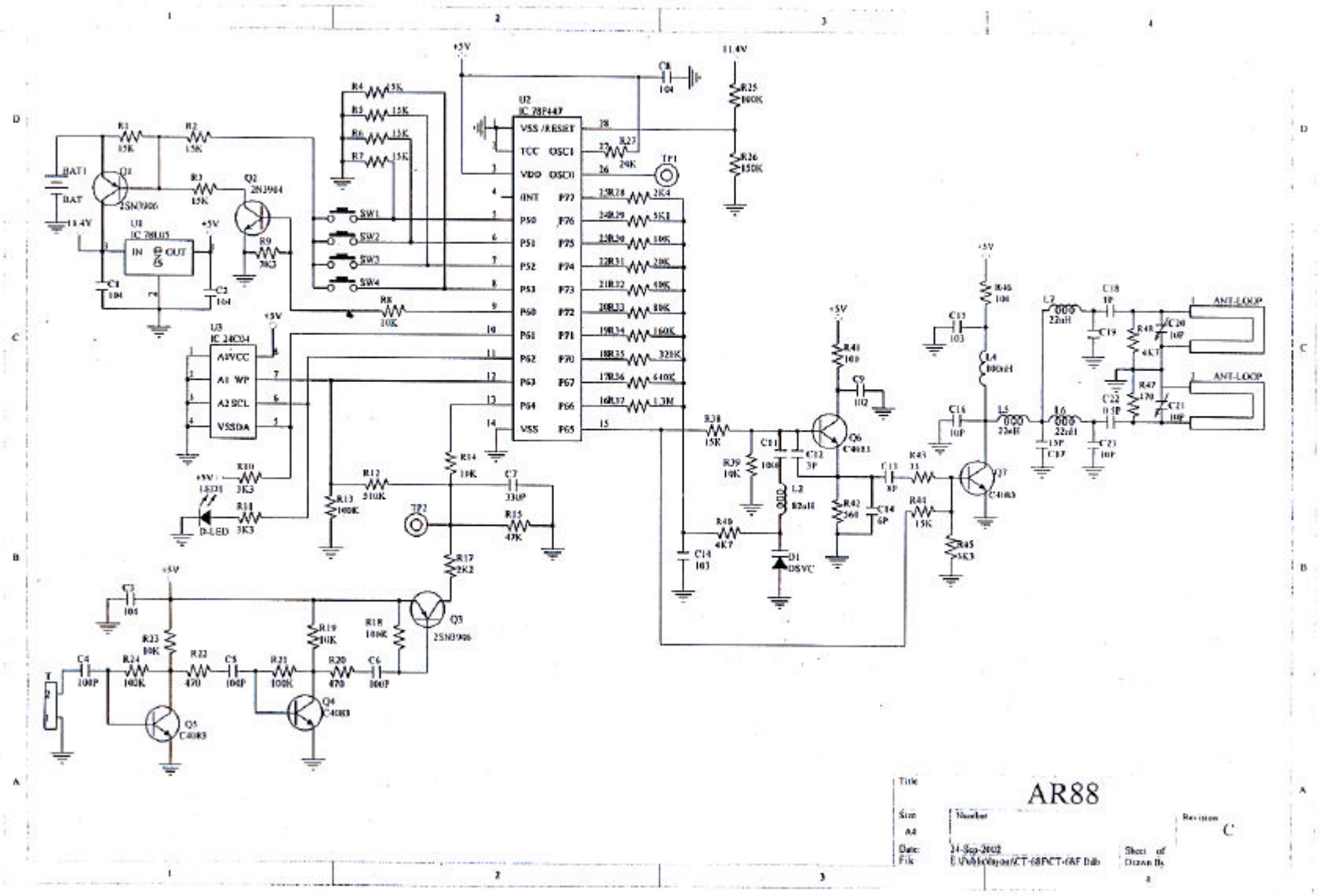
AR88
Revision
C
Size
A4
Date:
File
Sheet of
Drawn By
ANT-LOOP
ANT-LOOP
U2
IC 78P447
U3
IC 24C04
U1
IC 78L05
BAT1
BAT
Q1
2SN9006
Q2
2N3904
Q3
2SN9006
Q4
C4083
Q5
C4083
Q6
C4083
Q7
C4083
D1
DSVC
D-LED
TP1
TP2
SW1
SW2
SW3
SW4
+5V
11.4V