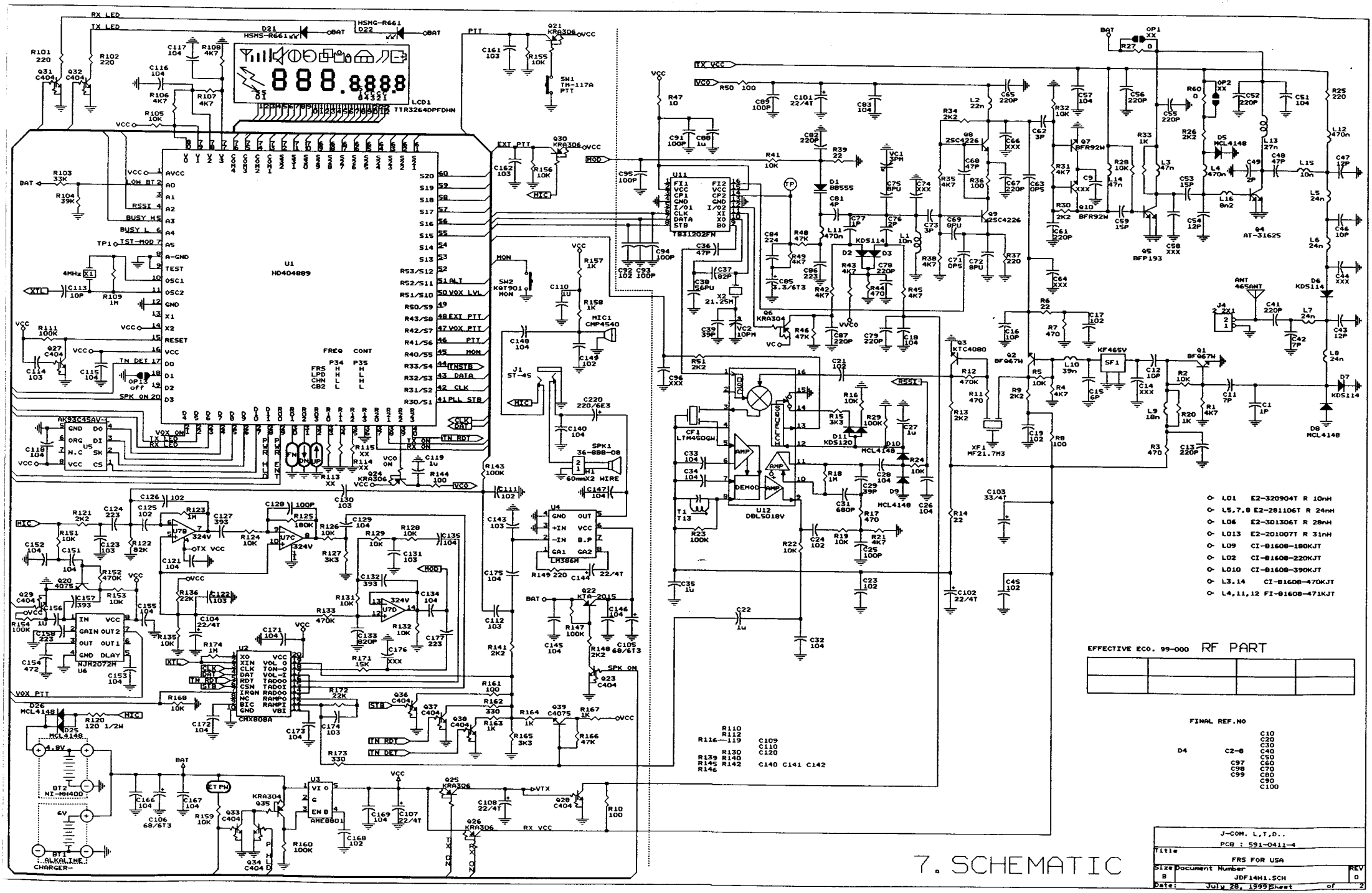
U1 HD404889
U11 TB31202FN
U12 DBL5018V
U2 CHX808A
U3 AHE8801
U4 LH386H
U5 AK93C45AV
U6 NJR2072H
LCD1 TTR32640PFDHN
888.8888
RX LED
TX LED
PTT
EXT PTT
MOD
MIC
MON
VCC
BAT
VCO
TX VCC
RX VCC
SPK ON
TN RDY
TN DET
CLK
DAT
STB
XTL
4MHz
BT1 ALKALINE CHARGER
BT2 NI-MH400
ANT 465ANT
EFFECTIVE ECO. 99-000 RF PART
FINAL REF.NO
L01 E2-320904T R 10nH
L5,7,8 E2-281106T R 24nH
L06 E2-301306T R 28nH
L013 E2-201007T R 31nH
L09 CI-8160B-180KJT
L02 CI-8160B-220KJT
L010 CI-8160B-390KJT
L3,14 CI-8160B-470KJT
L4,11,12 FI-8160B-471KJT
J-COM. L,T,D..
PCB : 591-0411-4
Title FRS FOR USA
Size B
Document Number JDF14H1.SCH
REV 0
Date: July 28, 1999
Sheet of 2

7. SCHEMATIC