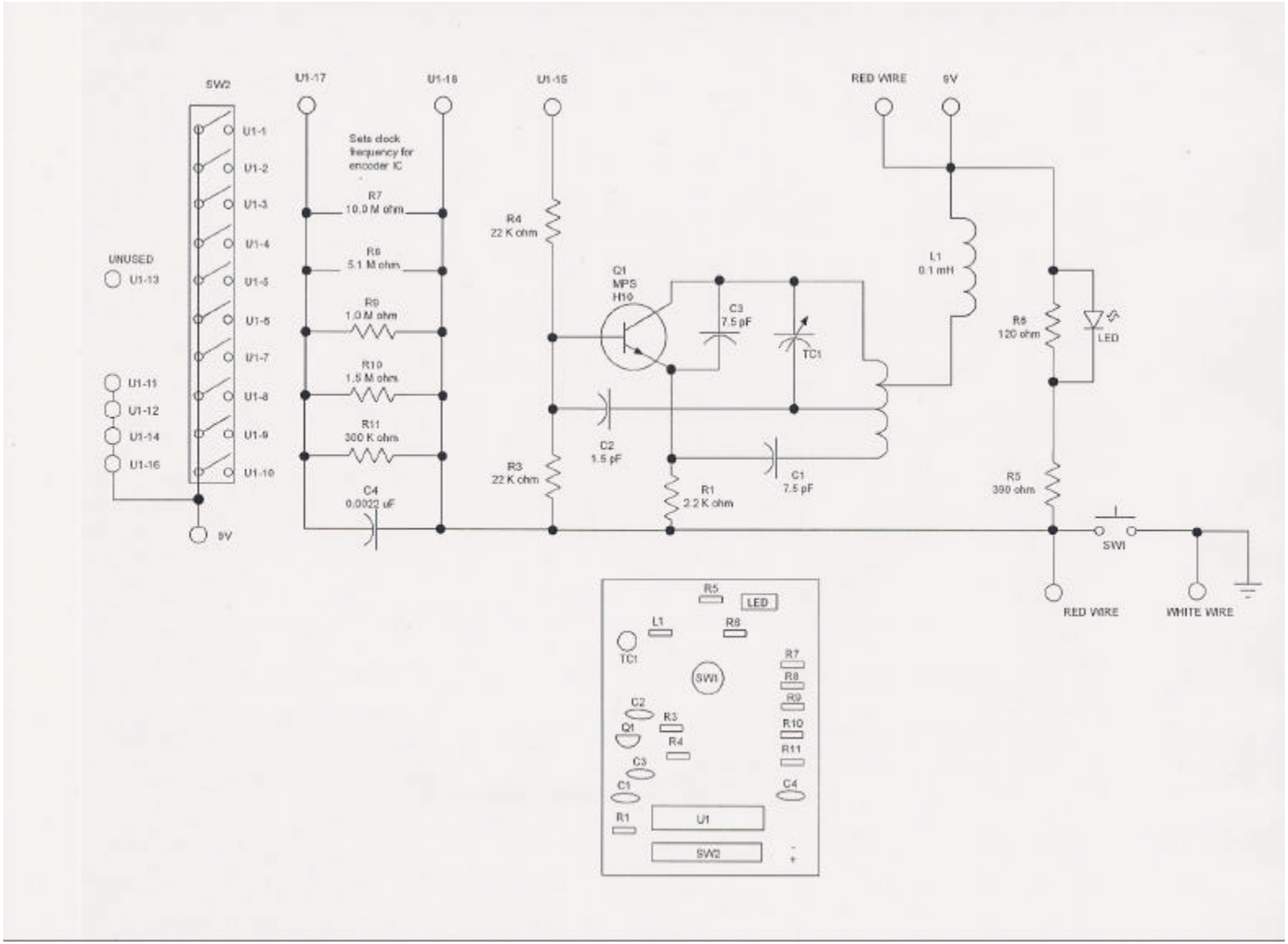
SW2
U1-1
U1-2
U1-3
U1-4
U1-5
U1-6
U1-7
U1-8
U1-9
U1-10
UNUSED
U1-13
U1-11
U1-12
U1-14
U1-16
9V
U1-17
U1-18
U1-15
Sets clock frequency for encoder IC
R7
10.0 M ohm
R8
5.1 M ohm
R9
1.0 M ohm
R10
1.5 M ohm
R11
300 K ohm
C4
0.0022 uF
R4
22 K ohm
R3
22 K ohm
Q1
MPS H10
C3
7.5 pF
TC1
C2
1.5 pF
R1
2.2 K ohm
C1
7.5 pF
RED WIRE
9V
L1
0.1 mH
R6
120 ohm
LED
R5
390 ohm
SW1
RED WIRE
WHITE WIRE
R5
LED
L1
R8
TC1
SW1
R7
R8
R9
R10
R11
C2
R3
Q1
R4
C3
C1
C4
R1
U1
SW2
-
+