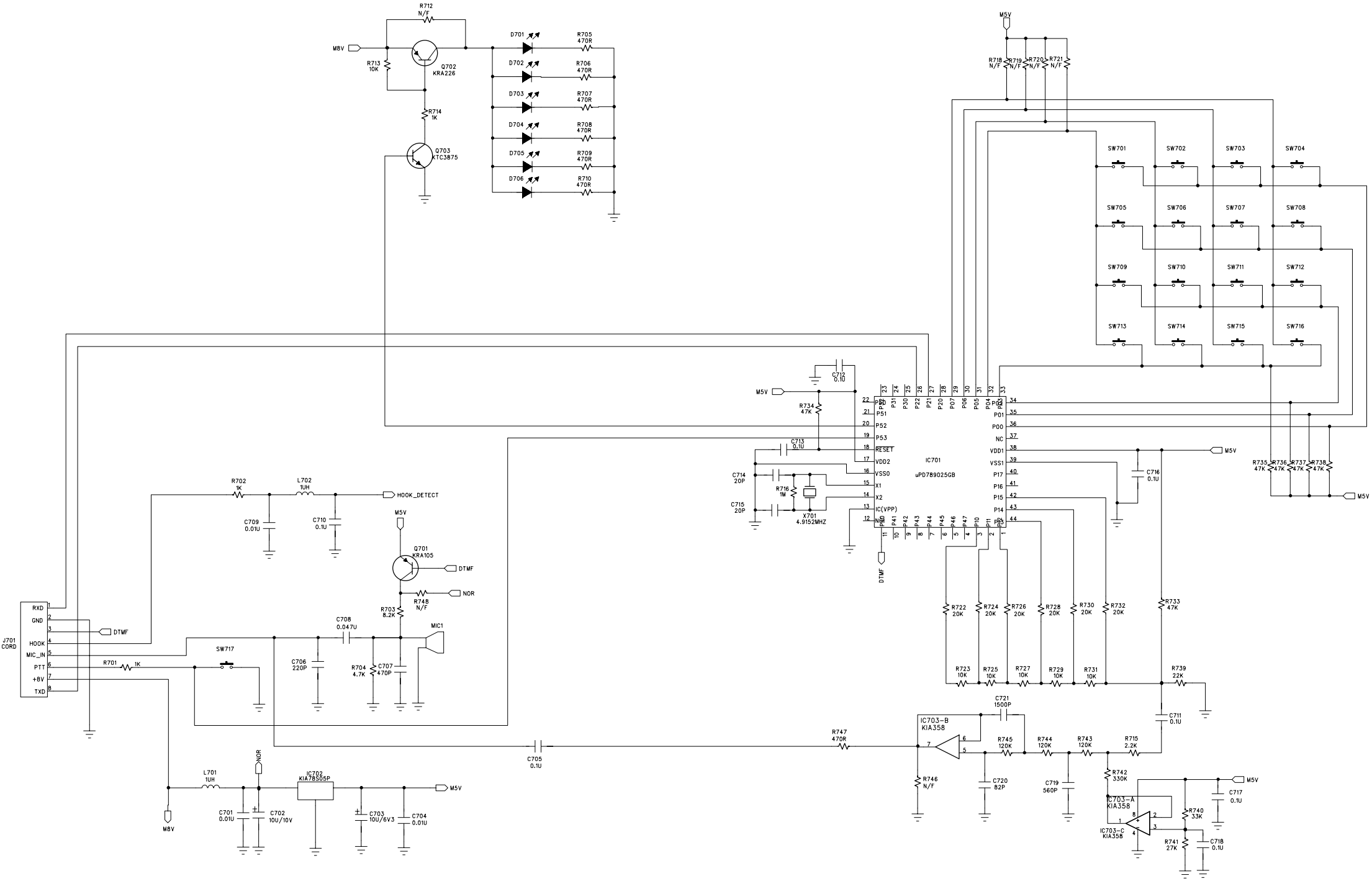
R712 N/F
M8V
R713 10K
Q702 KRA226
R714 1K
Q703 KTC3875
D701
D702
D703
D704
D705
D706
R705 470R
R706 470R
R707 470R
R708 470R
R709 470R
R710 470R
M5V
R718 N/F
R719 N/F
R720 N/F
R721 N/F
SW701
SW702
SW703
SW704
SW705
SW706
SW707
SW708
SW709
SW710
SW711
SW712
SW713
SW714
SW715
SW716
C712 0.1U
R734 47K
C713 0.1U
C714 20P
C715 20P
R716 1M
X701 4.9152MHZ
IC701
uPD789025GB
IC(VPP)
RESET
VDD2
VSS0
VDD1
VSS1
NC
P00
P01
P02
P03
P04
P05
P06
P07
P20
P21
P22
P30
P31
P41
P42
P43
P44
P45
P46
P47
P10
P11
P12
P14
P15
P16
P17
P50
P51
P52
P53
DTMF
R735 47K
R736 47K
R737 47K
R738 47K
C716 0.1U
R722 20K
R724 20K
R726 20K
R728 20K
R730 20K
R732 20K
R733 47K
R723 10K
R725 10K
R727 10K
R729 10K
R731 10K
R739 22K
C711 0.1U
C721 1500P
IC703-B KIA358
R747 470R
R745 120K
R744 120K
R743 120K
R715 2.2K
R746 N/F
C720 82P
C719 560P
R742 330K
C703-A KIA358
IC703-C KIA358
R740 33K
R741 27K
C718 0.1U
C717 0.1U
R702 1K
L702 1UH
HOOK_DETECT
C709 0.01U
C710 0.1U
Q701 KRA105
NOR
R748 N/F
R703 8.2K
C708 0.047U
MIC1
J701 CORD
RXD
GND
HOOK
MIC_IN
PTT
+8V
TXD
SW717
R701 1K
C706 220P
R704 4.7K
C707 470P
C705 0.1U
L701 1UH
IC702 KIA78S05P
C701 0.01U
C702 10U/10V
C703 10U/6V3
C704 0.01U

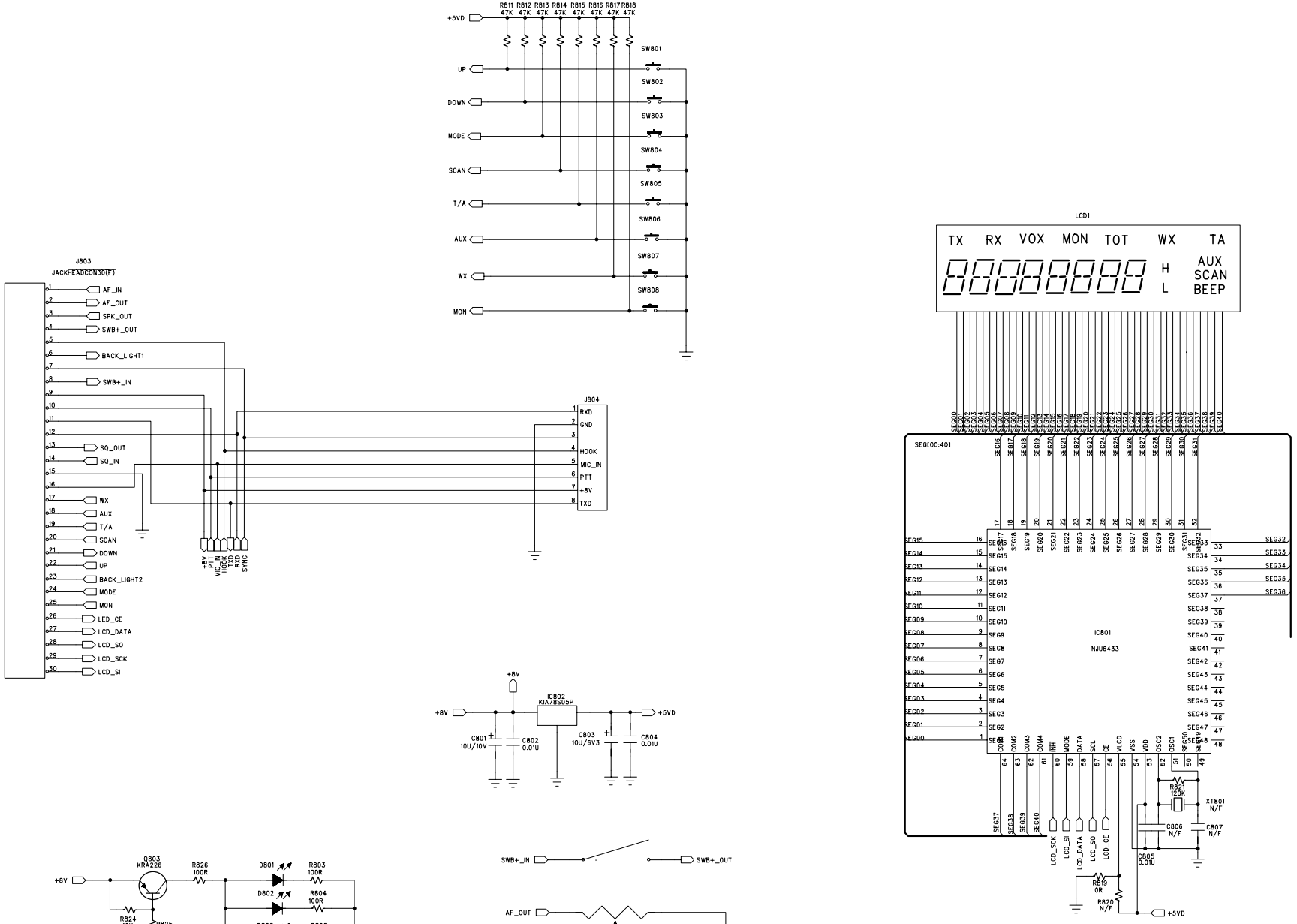
R811 R812 R813 R814 R815 R816 R817 R818
47K 47K 47K 47K 47K 47K 47K 47K
+5VD
UP
DOWN
MODE
SCAN
T/A
AUX
WX
MON
SW801
SW802
SW803
SW804
SW805
SW806
SW807
SW808
J803
JACKHEADCON30(F)
AF_IN
AF_OUT
SPK_OUT
SWB+_OUT
BACK_LIGHT1
SWB+_IN
SQ_OUT
SQ_IN
WX
AUX
T/A
SCAN
DOWN
UP
BACK_LIGHT2
MODE
MON
LED_CE
LCD_DATA
LCD_SO
LCD_SCK
LCD_SI
+8V
PTT
MIC_IN
HOOK
RXD
RXD
SYNC
J804
RXD
GND
HOOK
MIC_IN
PTT
+8V
TXD
LCD1
TX RX VOX MON TOT WX TA
H AUX
L SCAN
BEEP
SEG(00:40)
IC801
NJU6433
R821
120K
XT801
N/F
C806
N/F
C807
N/F
C805
0.01U
R819
0R
R820
N/F
+5VD
+8V
IC802
KIA78S05P
+5VD
C801
10U/10V
C802
0.01U
C803
10U/6V3
C804
0.01U
Q803
KRA226
R826
100R
R824
10K
R825
1K
Q804
KTC3875
BACK_LIGHT2
Q801
KRA226
R801
10K
R802
1K
Q802
KTC3875
BACK_LIGHT1
D801 R803 100R
D802 R804 100R
D803 R805 100R
D804 R806 100R
D805 R807 100R
D806 R808 100R
D807 R809 100R
D808 R810 100R
D809 R822 100R
D810 R823 100R
SWB+_IN
SWB+_OUT
AF_OUT
AF_IN
VR801
SQ_IN
SQ_OUT
R827
0R
SPK
J801
J802
SPK_OUT

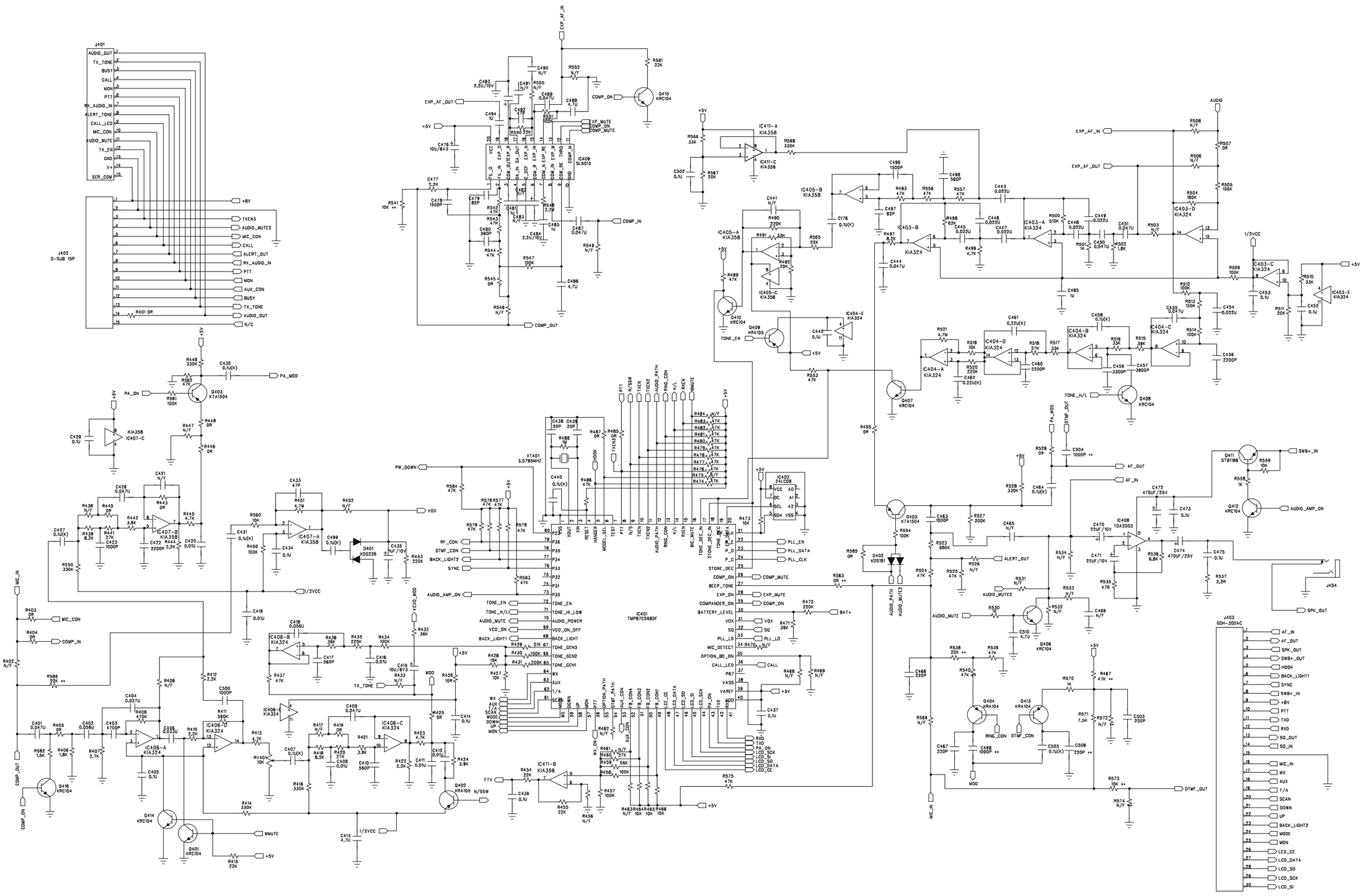
J401
AUDIO_OUT
TX_TONE
BUSY
CALL
MON
PTT
RX_AUDIO_IN
ALERT_TONE
CALL_LED
MIC_CON
AUDIO_MUTE
TX_EN
GND
V+
SER_COM
J402
D-SUB 15P
+8V
TXEN3
AUDIO_MUTE2
MIC_CON
CALL
ALERT_OUT
RX_AUDIO_IN
PTT
MON
AUX_CON
BUSY
TX_TONE
AUDIO_OUT
N/C
R401 0R
IC409
SL5015
COMP_ON
COMP_MUTE
COMP_IN
COMP_OUT
Q415
KRC104
IC411-A
KIA358
IC411-C
KIA358
IC405-B
KIA358
IC405-A
KIA358
IC405-C
KIA358
IC403-B
KIA324
IC403-A
KIA324
IC403-D
KIA324
IC403-C
KIA324
IC403-E
KIA324
IC404-A
KIA324
IC404-B
KIA324
IC404-C
KIA324
IC404-D
KIA324
IC404-E
KIA324
Q410
KRC104
Q409
KRA105
TONE_EN
Q407
KRC104
Q408
KRC104
TONE_H/L
AUDIO
EXP_AF_IN
EXP_AF_OUT
1/2VCC
Q403
KTA1504
IC407-C
KIA358
IC407-B
KIA358
IC407-A
KIA358
D401
KDS226
PA_ON
PA_MOD
VOX
PW_DOWN
XT401
3,5795MHZ
IC402
24LC08
IC401
TMP87CS68DF
Q405
KTA1504
D402
KDS181
AUDIO_PATH
AUDIO_MUTE2
AUDIO_MUTE
ALERT_OUT
AF_OUT
AF_IN
DTMF_OUT
IC408
TDA2003
Q411
STB1188
Q412
KRC104
SWB+_IN
AUDIO_AMP_ON
SPK_OUT
J404
J403
GDH-300AC
Q406
KRC104
Q404
KRA104
Q413
KRA104
DTMF_CON
RING_CON
MOD
MMUTE
Q402
KRA105
N/SSW
Q416
KRC104
Q414
KRC104
Q401
KRC104
IC406-A
KIA324
IC406-B
KIA324
IC406-C
KIA324
IC406-D
KIA324
IC411-B
KIA358
BAT+
MIC_IN
MIC_CON
COMP_IN
COMP_OUT
COMP_ON
+5V

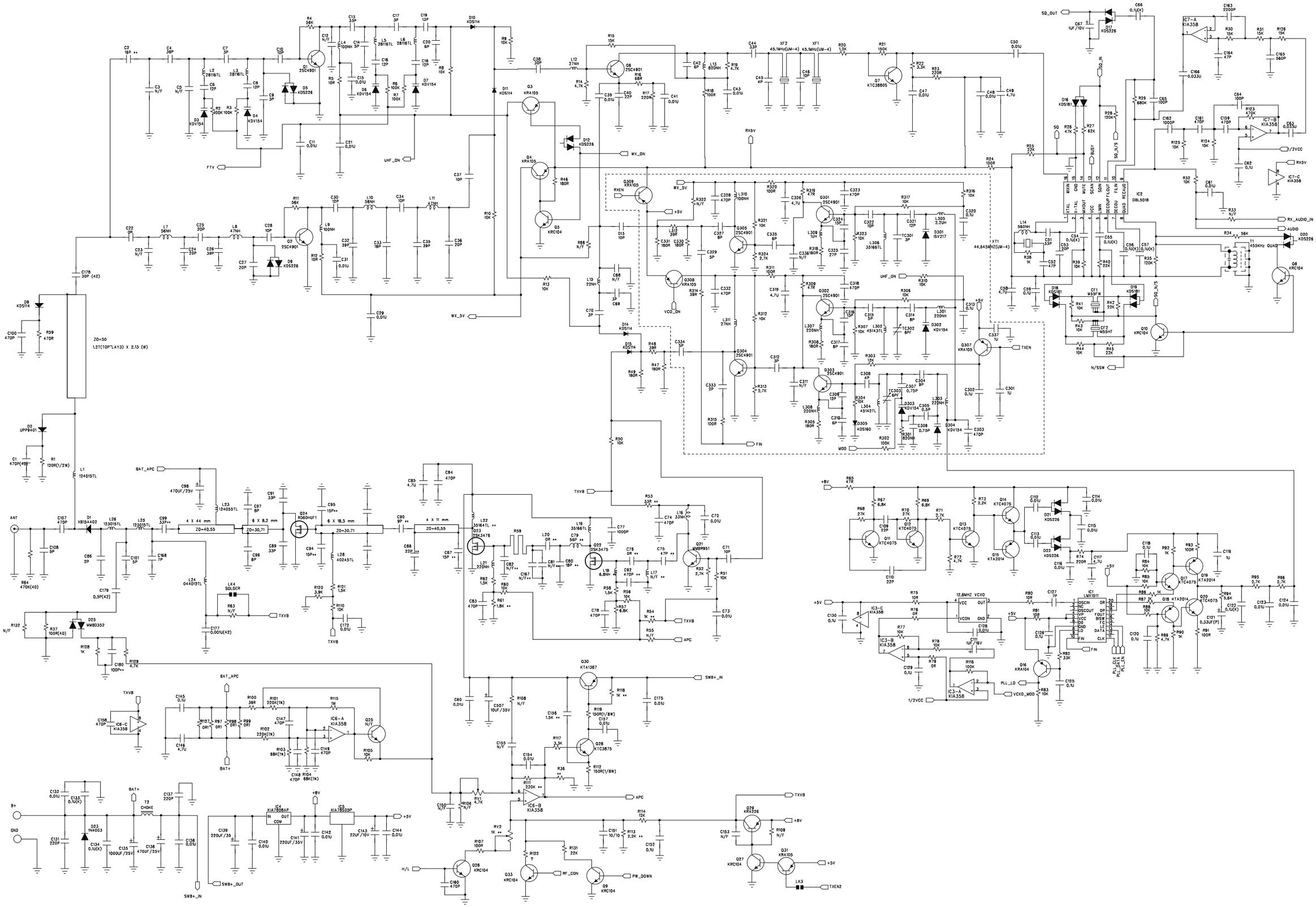
Q1 2SC4901
Q2 2SC4901
Q3 KRA105
Q4 KRA105
Q5 KRC104
Q6 2SC4901
Q7 KTC3880S
Q8 KRC104
Q9 KRC104
Q10 KRC104
Q11 KTC4075
Q12 KTC4075
Q13 KTC4075
Q14 KTC4075
Q15 KTA2014
Q16 KRA104
Q17 KTC4075
Q18 KTA2014
Q19 KTA2014
Q20 KTC4075
Q21 MMBR951
Q22 2SK3475
Q23 2SK3476
Q24 RD60HUF1
Q25 MMBD352
Q26 KRC104
Q27 KRC104
Q28 KTC3875
Q29 KRA226
Q30 KTA1367
Q31 KRA105
Q301 2SC4901
Q302 2SC4901
Q303 2SC4901
Q304 2SC4901
Q305 2SC4901
Q306 2SC4901
Q307 KRA105
Q308 KRA105
Q309 KRA105
IC1 LMX1511
IC2 DBL5018
IC3-A KIA358
IC3-B KIA358
IC3-C KIA358
IC4 KIA7808AP
IC5 KIA78S05P
IC6-A KIA358
IC6-B KIA358
IC6-C KIA358
IC7-A KIA358
IC7-B KIA358
IC7-C KIA358
XF1 45.1MHz(UM-4)
XF2 45.1MHz(UM-4)
XT1 44.645MHZ(UM-4)
CF1 M59FW
CF2 M59HT
T1 455KHz QUAD
T2 CHOKE
ANT
B+
GND
BAT_APC
BAT+
SWB+_IN
SWB+_OUT
TXVB
TXEN
TXEN2
RX5V
+5V
+8V
1/2VCC
SQ_OUT
SQ_IN
SQ_N/S
N/SSW
RX_AUDIO_IN
AUDIO
FTV
UHF_ON
WX_ON
WX_5V
VCO_ON
FIN
MOD
APC
PW_DOWN
RF_CON
H/L
PLL_CLK
PLL_DATA
PLL_LK
PLL_LD
VCXO_MOD
Z0=50
1.2T(TOP LAY3) X 2.13 (W)
4 X 44 mm
6 X 8.2 mm
6 X 18.5 mm
4 X 11 mm
Z0=40.55
Z0=30.71
Z0=40.55

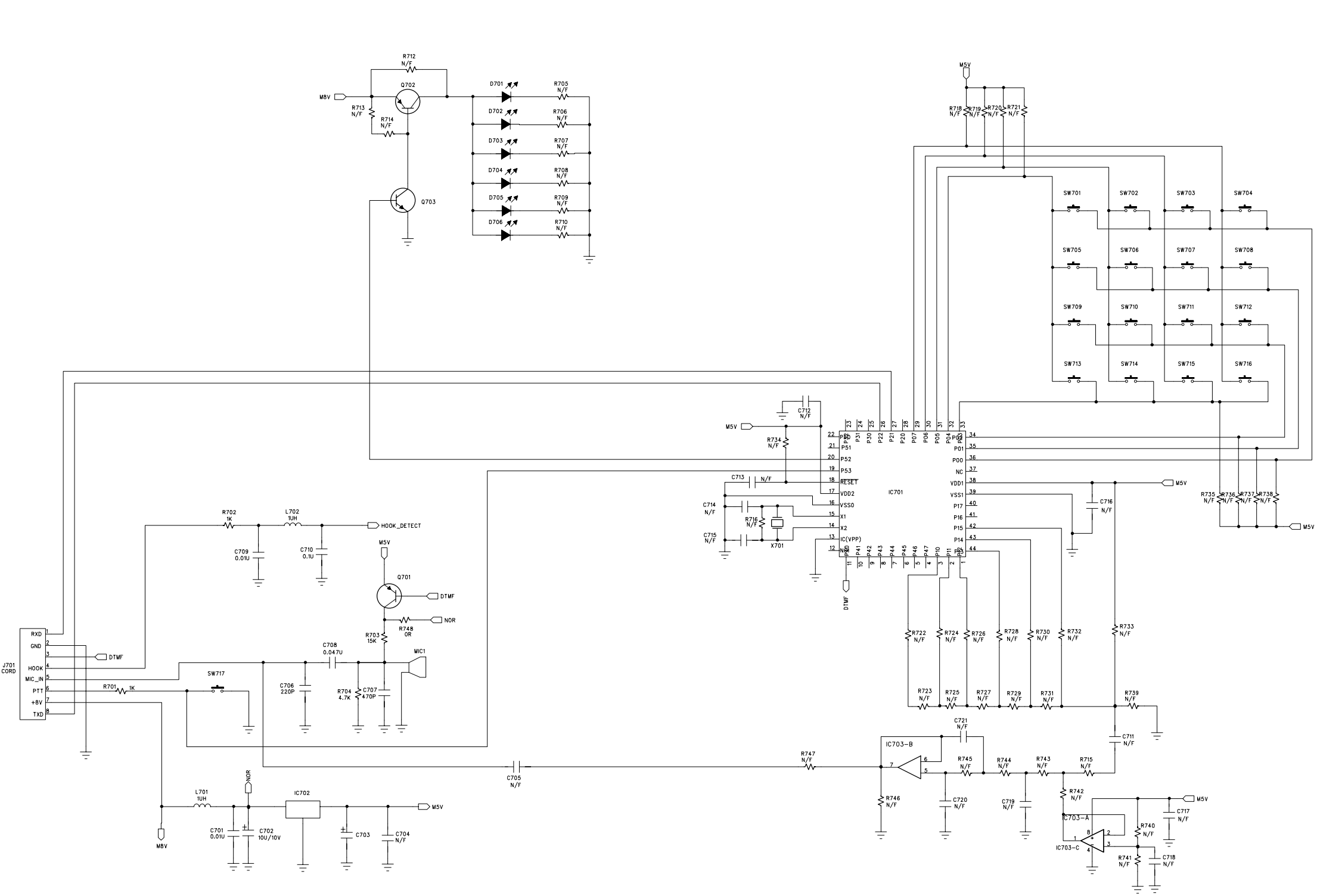
ML32XXMIC.sch-1 - Wed Oct 09 15:34:51 2002
R712 N/F
Q702
M8V
R713 N/F
R714 N/F
Q703
D701
D702
D703
D704
D705
D706
R705 N/F
R706 N/F
R707 N/F
R708 N/F
R709 N/F
R710 N/F
M5V
R718 N/F
R719 N/F
R720 N/F
R721 N/F
SW701
SW702
SW703
SW704
SW705
SW706
SW707
SW708
SW709
SW710
SW711
SW712
SW713
SW714
SW715
SW716
C712 N/F
R734 N/F
C713 N/F
C714 N/F
C715 N/F
R716 N/F
X701
IC701
P50
P51
P52
P53
RESET
VDD2
VSS0
X1
X2
IC(VPP)
P30
P31
P22
P21
P20
P07
P06
P05
P04
P03
P02
P01
P00
NC
VDD1
VSS1
P17
P16
P15
P14
P41
P42
P43
P44
P45
P46
P47
P10
P11
DTMF
R735 N/F
R736 N/F
R737 N/F
R738 N/F
C716 N/F
R702 1K
L702 1UH
HOOK_DETECT
C709 0.01U
C710 0.1U
Q701
NOR
R748 0R
R703 15K
C708 0.047U
MIC1
J701 CORD
RXD
GND
HOOK
MIC_IN
PTT
+8V
TXD
SW717
R701 1K
C706 220P
R704 4.7K
C707 470P
R722 N/F
R724 N/F
R726 N/F
R728 N/F
R730 N/F
R732 N/F
R733 N/F
R723 N/F
R725 N/F
R727 N/F
R729 N/F
R731 N/F
R739 N/F
C721 N/F
IC703-B
R747 N/F
C705 N/F
R745 N/F
R744 N/F
R743 N/F
R715 N/F
C711 N/F
R746 N/F
C720 N/F
C719 N/F
R742 N/F
C717 N/F
IC703-A
IC703-C
R740 N/F
R741 N/F
C718 N/F
L701 1UH
IC702
C701 0.01U
C702 10U/10V
C703
C704 N/F