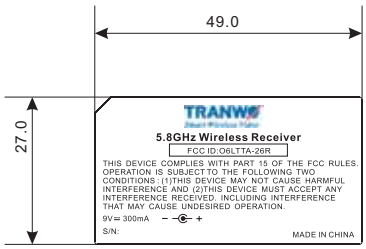

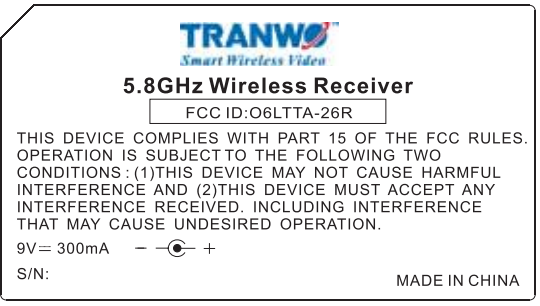

Scale=2:1

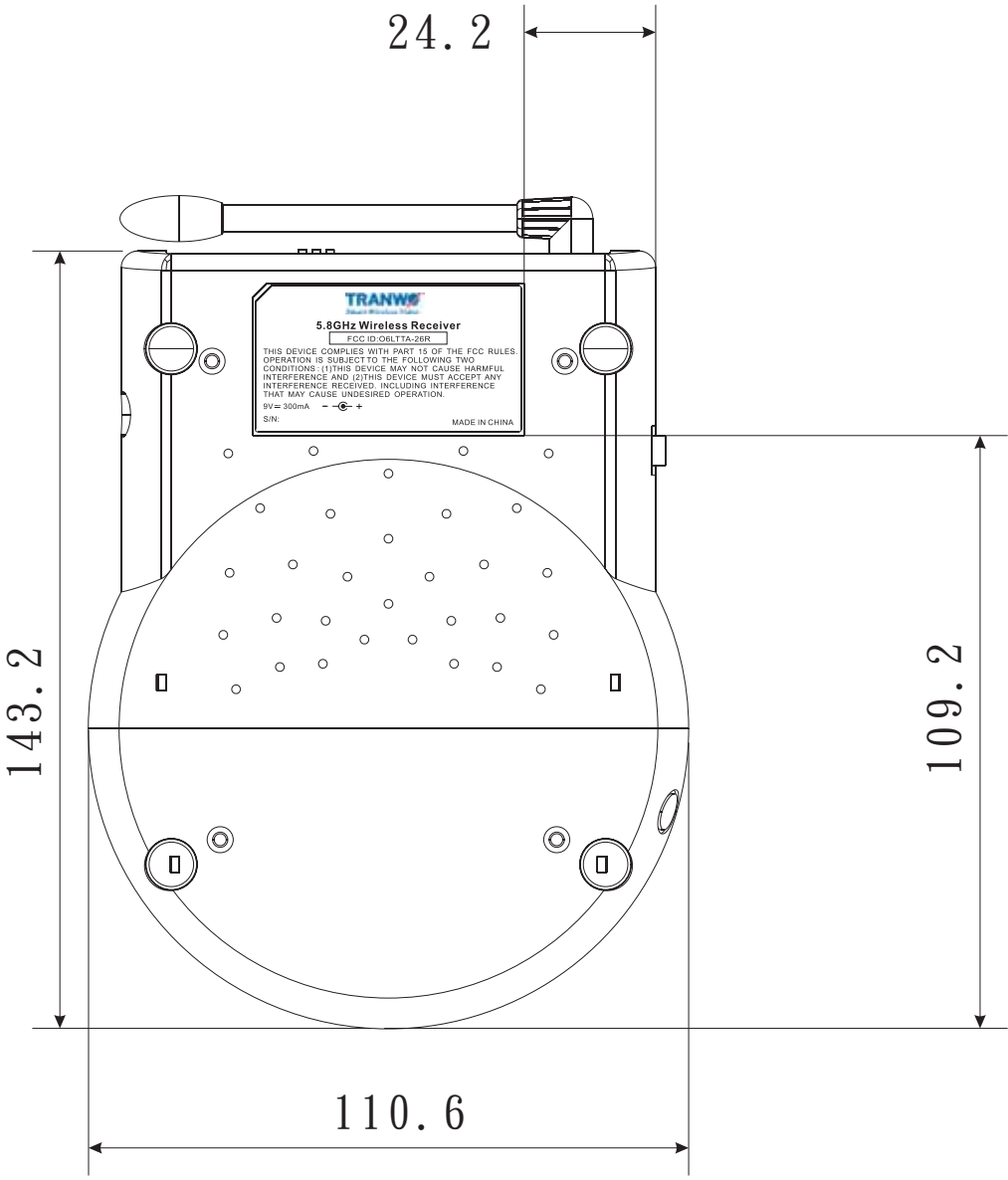

Receiver