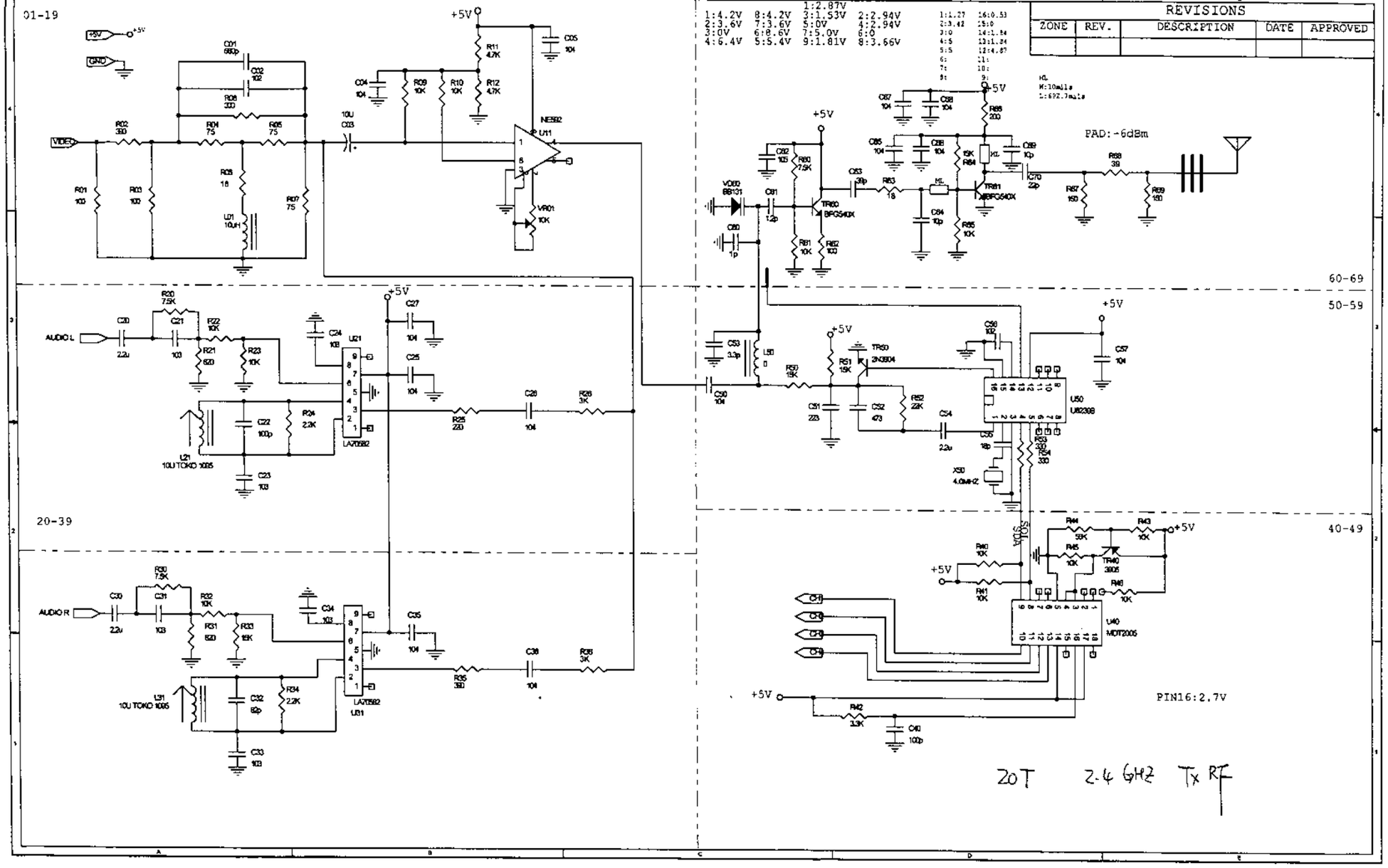
01-19
20-39
40-49
50-59
60-69
VIDEO
AUDIO L
AUDIO R
+5V
GND
NE592
LA7592
U21
U31
U50
U40
U41236B
MDT2005
VCO
BB131
BFG540X
2N3904
TR40
3905
X50
4.0MHZ
PAD:-6dBm
PIN16:2.7V
REVISIONS
ZONE
REV.
DESCRIPTION
DATE
APPROVED
20T 2.4 GHZ Tx RF