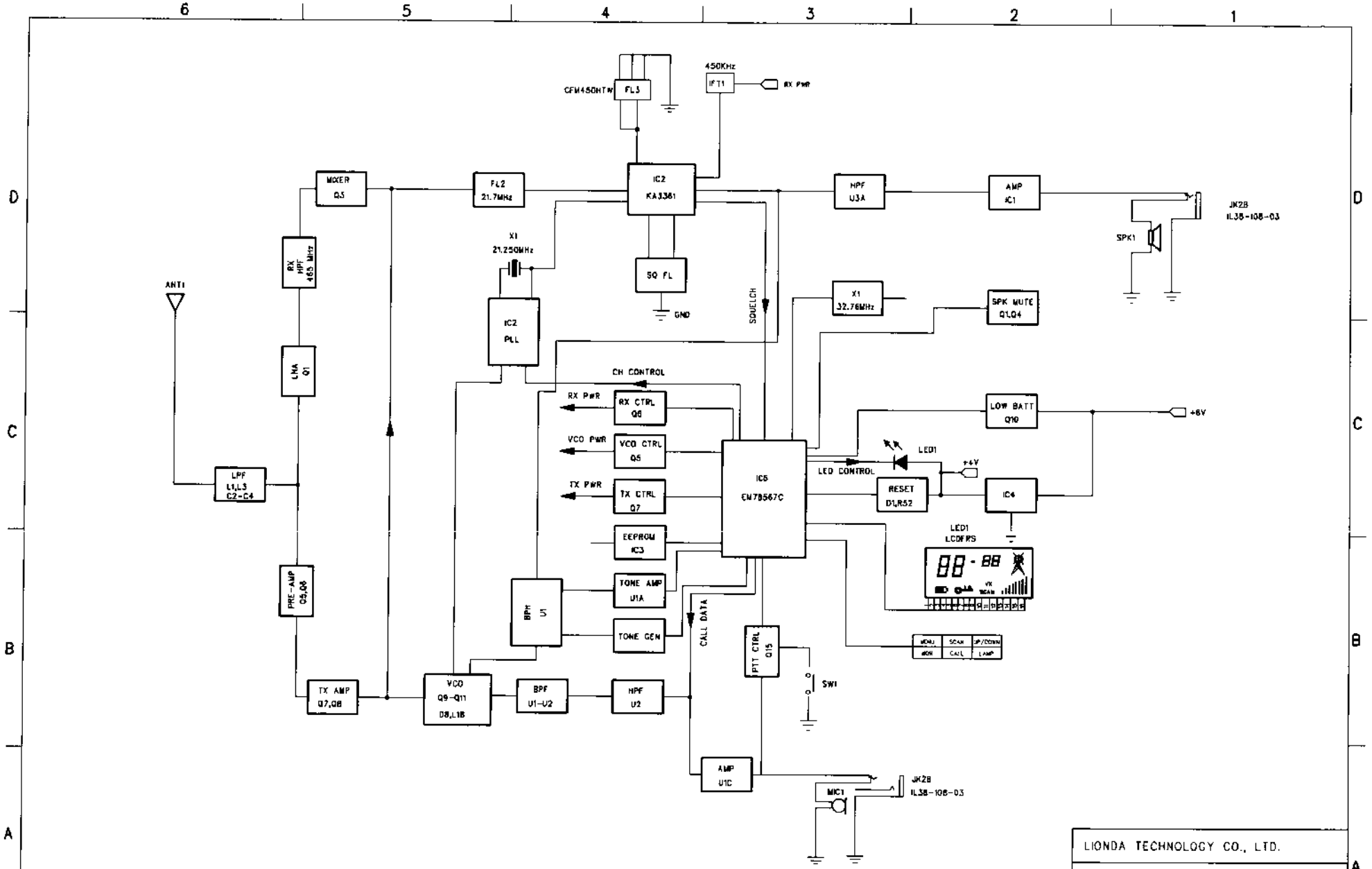

LIONDA TECHNOLOGY CO., LTD.		
TITLE: FRS 1029 (CTCSS) BLOCK DIAGRAM		
DRAWN	CHECKED	APPROVED
DAN CORONIA		
DATE : 26/05/2001	PAGE: 1of1	REV-A