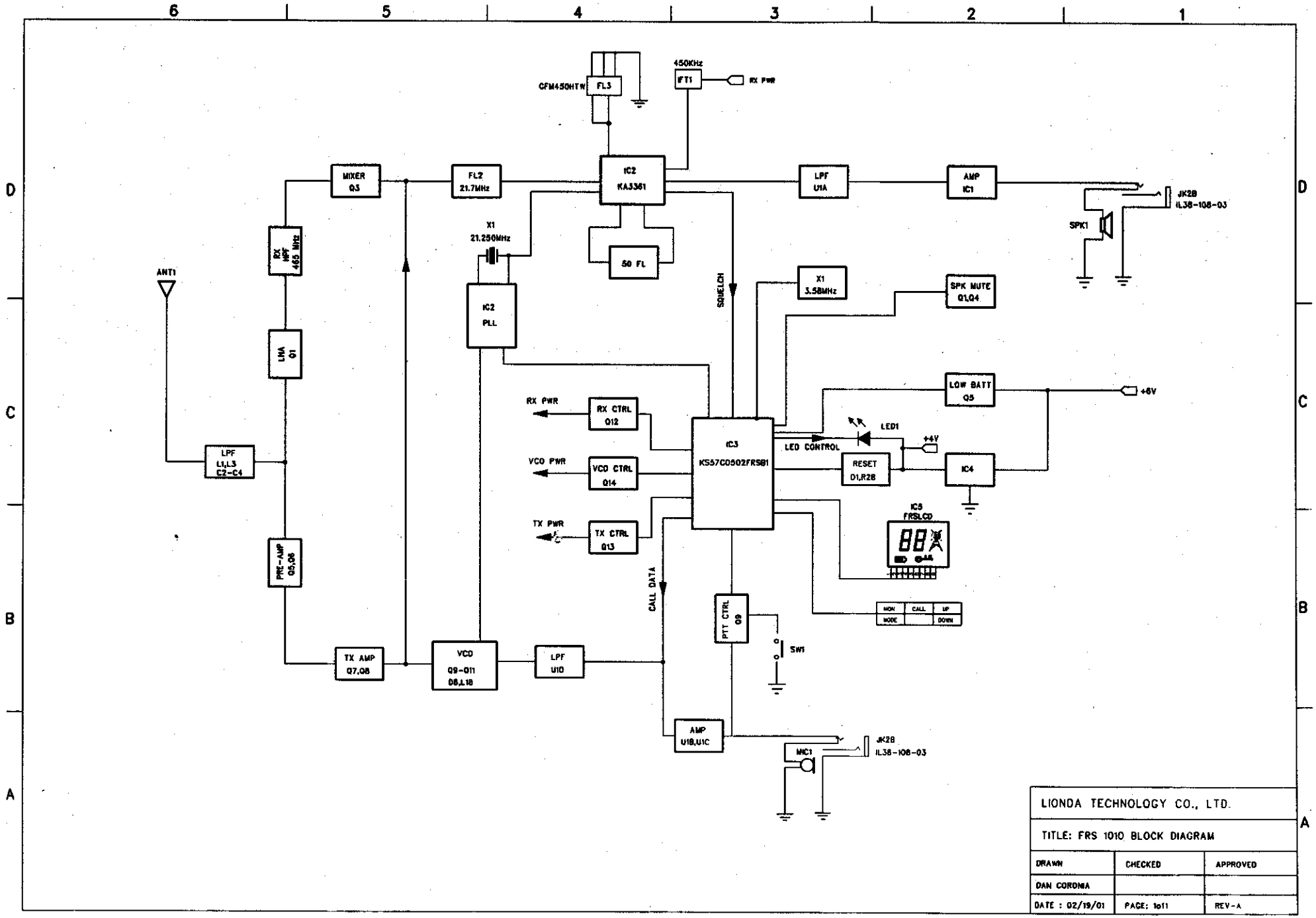

LIONDA TECHNOLOGY CO., LTD.		
TITLE: FRS 1010 BLOCK DIAGRAM		
DRAWN	CHECKED	APPROVED
DAN CORONIA		
DATE : 02/19/01	PAGE: 1of1	REV-A