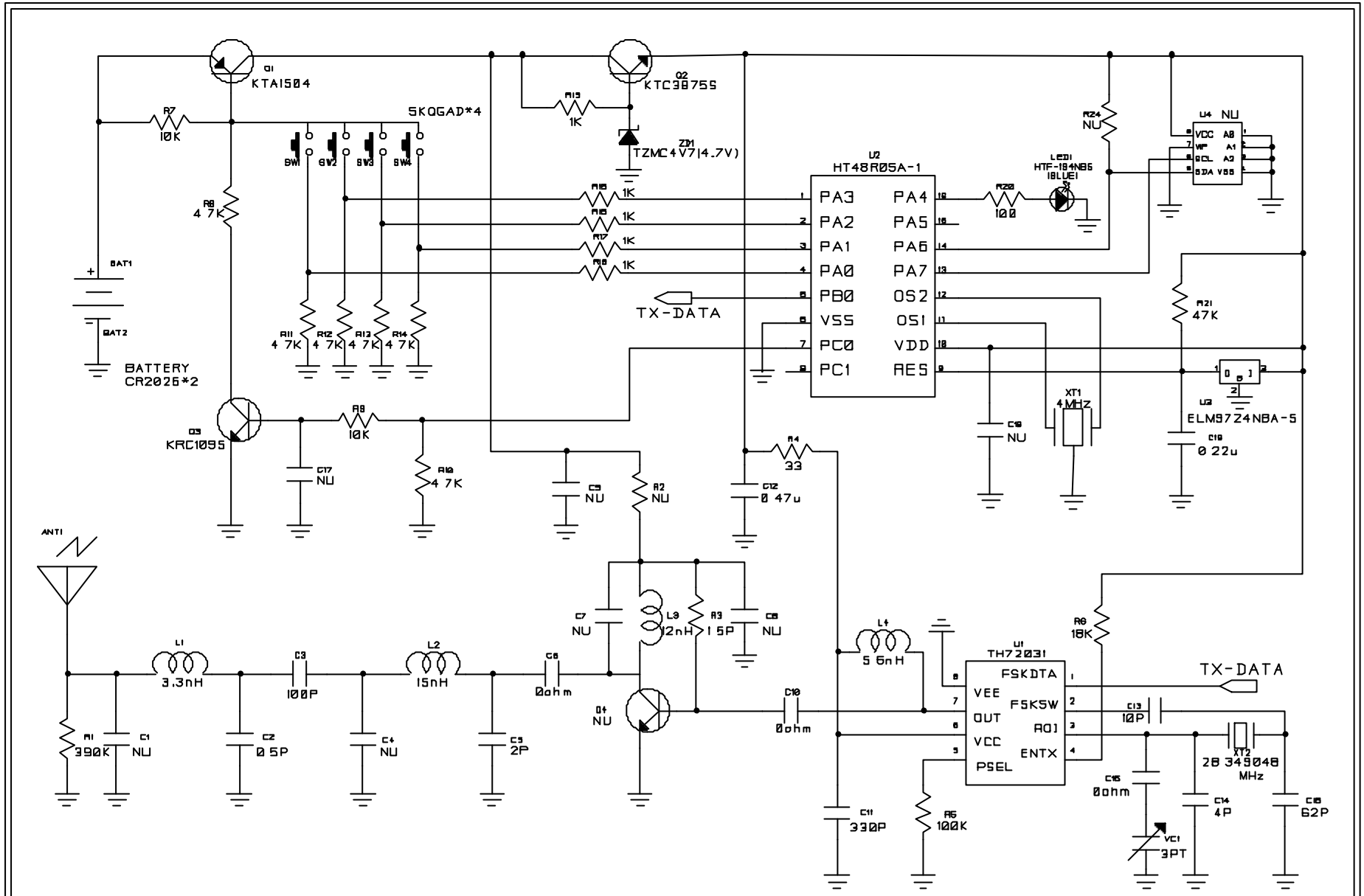

DATE 04-11-26		COMPANY NAME YOUNGSHIN ELECTRONICS CO.,LTD	
APPROVAL		MODEL R1800-F900	
CHECK		DWG NO RF-SCH-US-R1800F900-Rev00	REV 00
DRAWN		FILE NAME R1800-900.sch	SHEET 1 of 1