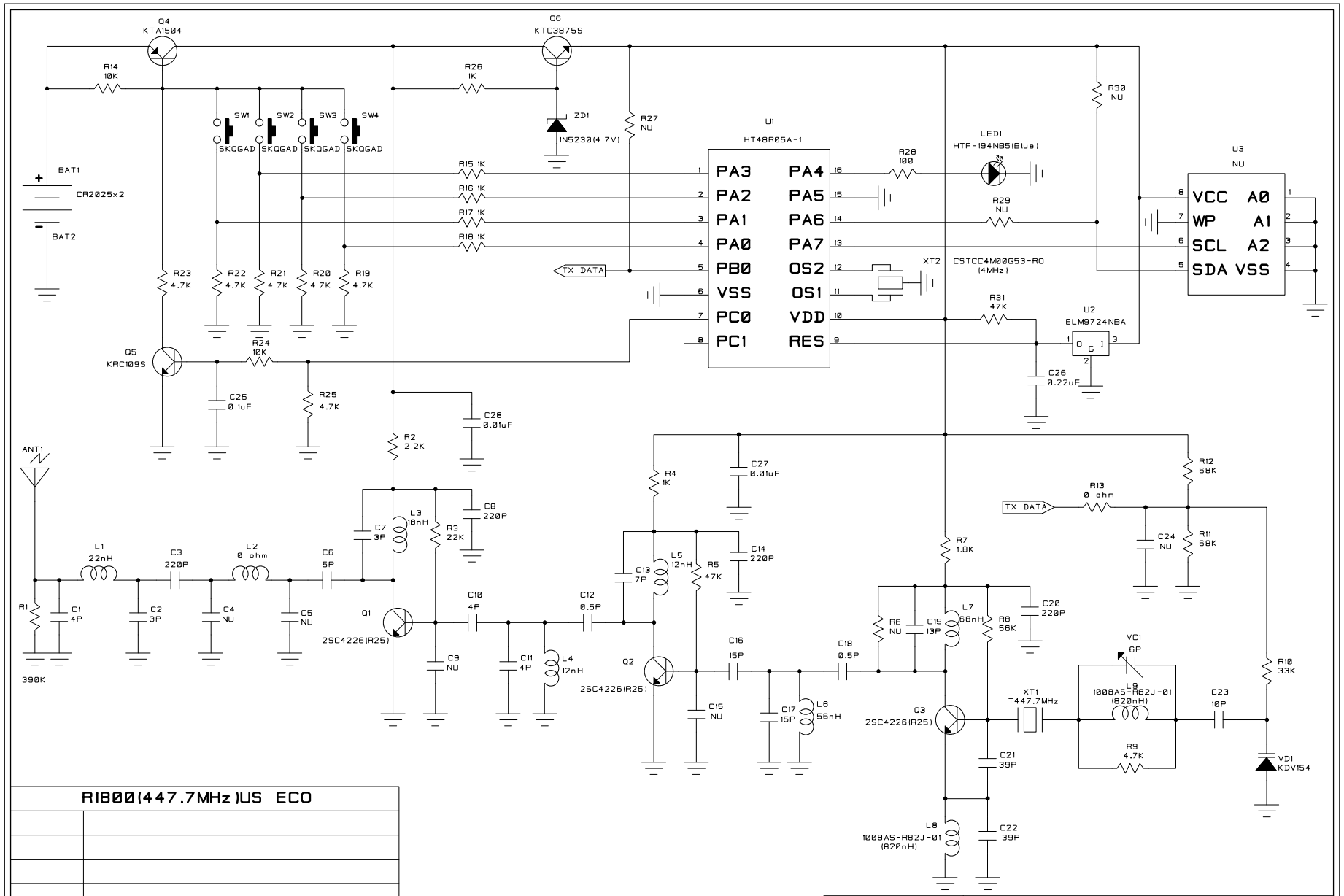

R1800(447.7MHz)US ECO	

DATE 05.03.02		COMPANY NAME YOUNGSHIN ELECTRONICS CO.,LTD.	
APPROVAL		MODEL R1800(FCC ID : O44JR1800F447)	
CHECK		DWG NO. RF-SCH-US-R1800F-Rev00	REV. 00
DRAWN		FILE NAME D:\YS-ELC\R1800\ RF-SCH-US-R1800F-Rev00.SCM	SHEET 1 of 1