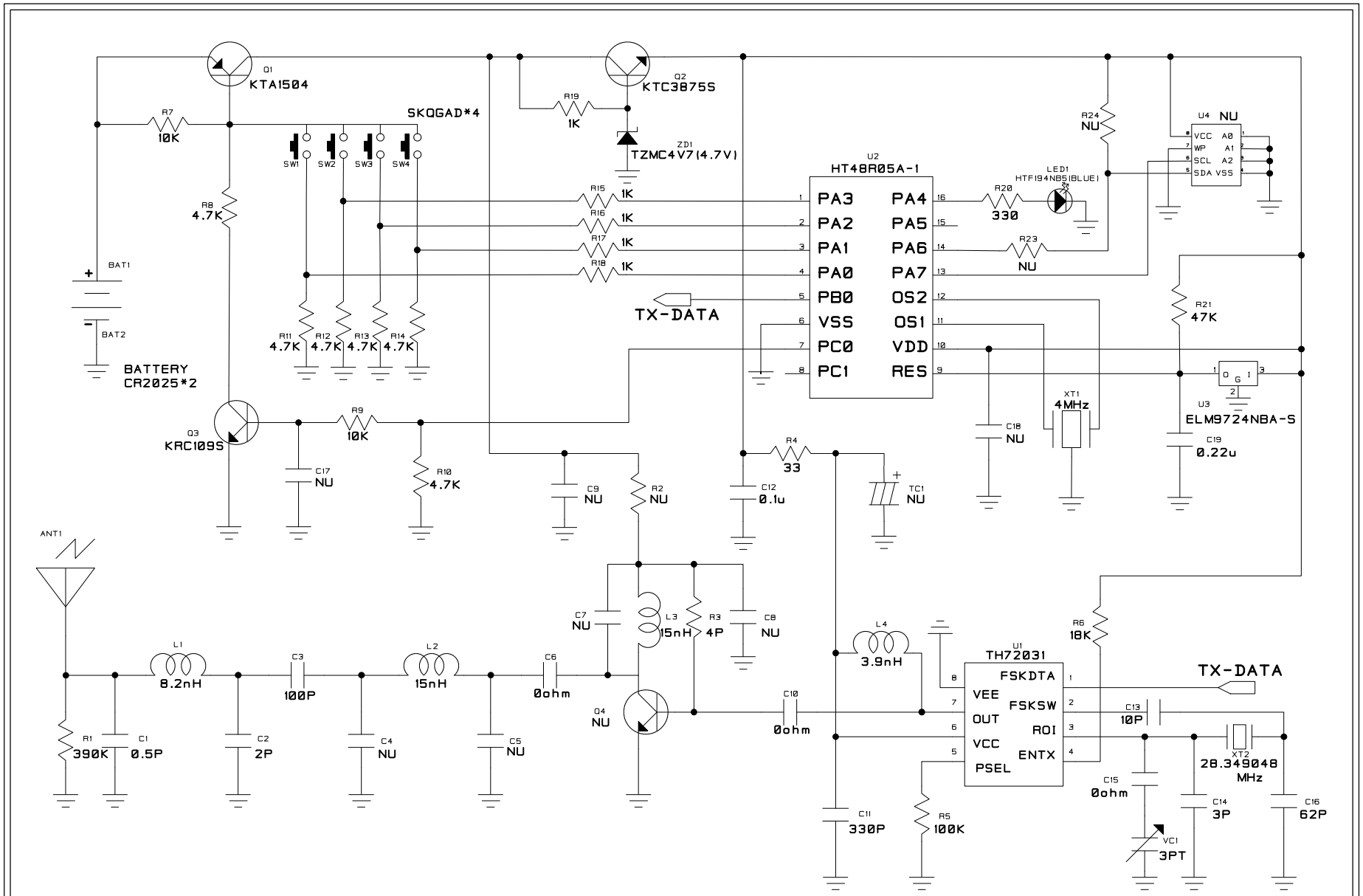

DATE 04-08-13		COMPANY NAME YOUNGSHIN ELECTRONICS CO.,LTD.	
APPROVAL		MODEL R1700-F900	
CHECK		DWG NO. RF-SCH-US-R1700F900-Rev00	REV. 00
DRAWN		FILE NAME R1700_900.scm	SHEET 1 of 1