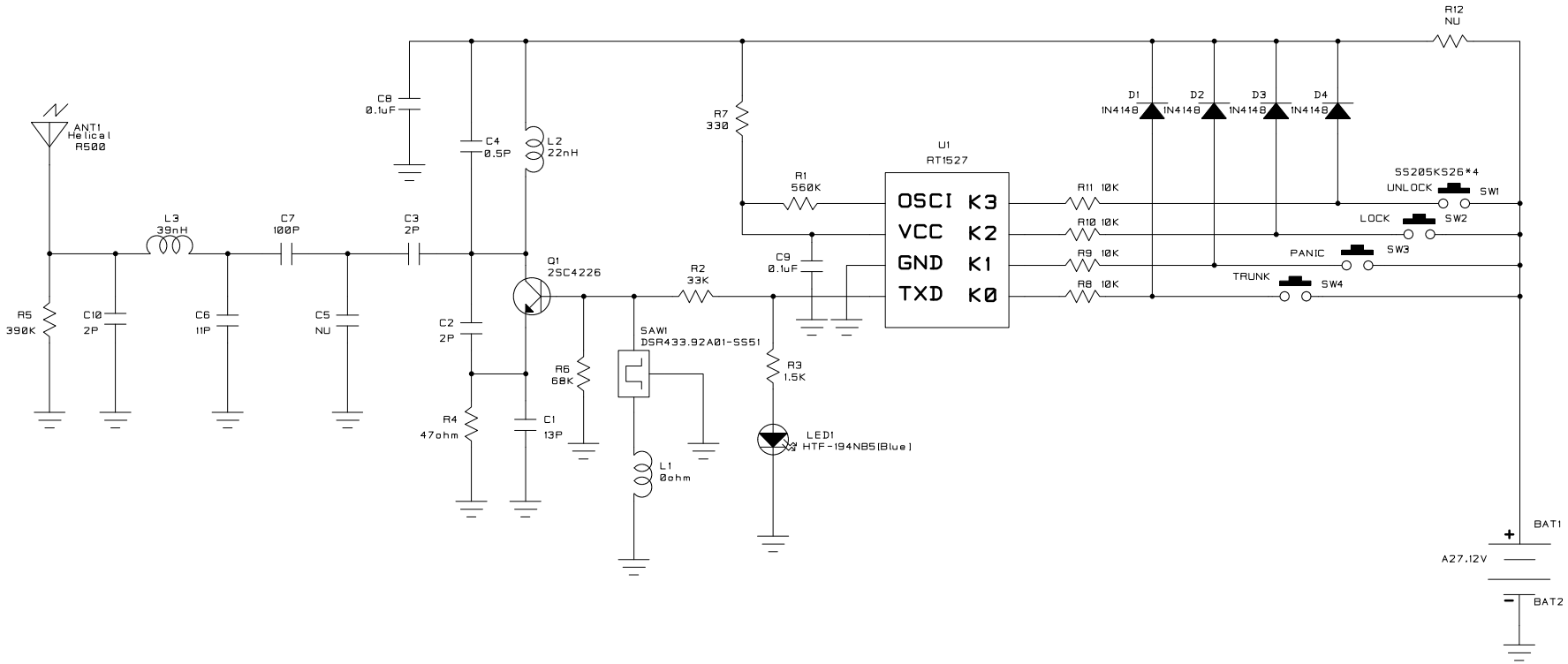

DATE 05.03.02		COMPANY NAME YOUNGSHIN ELECTRONICS CO.,LTD.	
APPROVAL		MODEL R500-01(FCC ID : O44J1WENR)	
CHECK		DWG NO. RF-SCH-EX-R500-Rev(02)	REV. 02
DRAWN		FILE NAME D:\YS-ELC\Alarm Remote\R500-01.SCM	SHEET 1 of 1