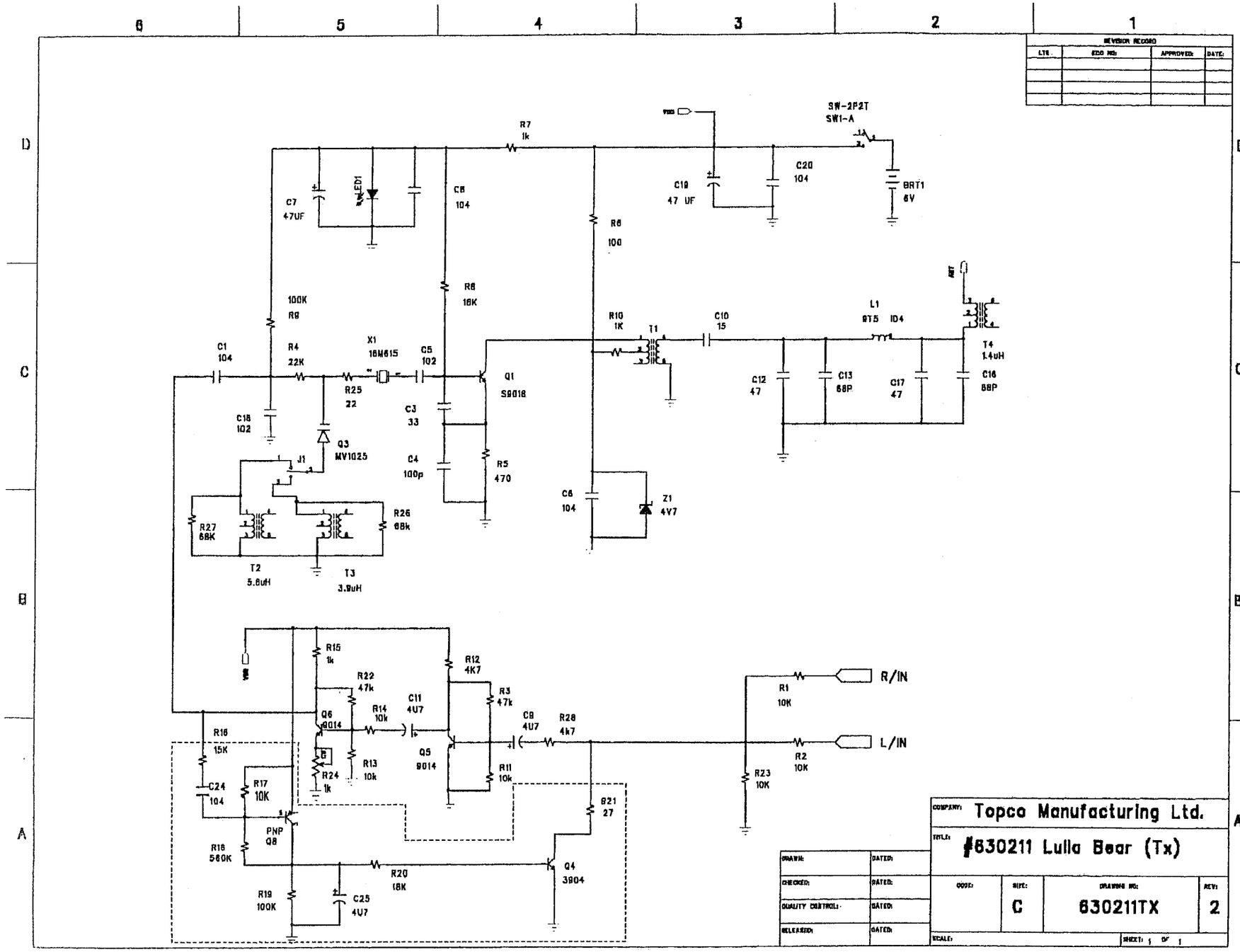
REVISION RECORD
LTR.
ECO NO:
APPROVED:
DATE:
SW-2P2T
SW1-A
R7
1k
C19
47 UF
C20
104
BRT1
6V
C7
47UF
LED1
C8
104
R6
100
R8
16K
100K
R9
R10
1K
T1
C10
15
L1
9T5 ID4
T4
1.4uH
C1
104
R4
22K
X1
16M615
C5
102
R25
22
Q1
S9018
C12
47
C13
68P
C17
47
C16
68P
C18
102
C3
33
Q3
MV1025
J1
C4
100p
R5
470
C6
104
Z1
4V7
R27
68K
R26
68k
T2
5.6uH
T3
3.9uH
R15
1k
R22
47k
R12
4K7
R3
47k
C11
4U7
Q6
9014
R14
10k
C9
4U7
R28
4k7
R1
10K
R/IN
R2
10K
L/IN
R16
15K
R24
1k
R13
10k
Q5
9014
R11
10k
R23
10K
C24
104
R17
10K
PNP
Q8
R21
27
R18
560K
R20
18K
Q4
3904
R19
100K
C25
4U7
DRAWN:
DATE:
CHECKED:
DATE:
QUALITY CONTROL:
DATE:
RELEASED:
DATE:
COMPANY:
Topco Manufacturing Ltd.
TITLE:
#630211 Lulla Bear (Tx)
CODE:
SIZE:
C
DRAWING NO:
630211TX
REV:
2
SCALE:
SHEET: 1 OF 1