REVISION RECORD			
LTR	ECO NO:	APPROVED:	DATE:

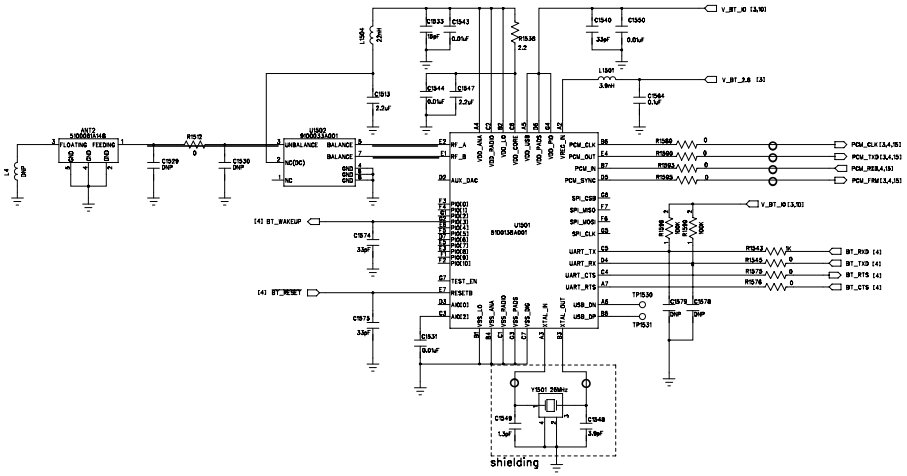

COMPANY:					
TITLE:					
DRAWN:	DATE:	CODE:	SIZE:	DRAWING NO:	REV:
CHECKED:	DATE:				
QUALITY CONTROL:	DATE:				
RELEASED:	DATE:	SCALE:		SHEET: OF	