Bluetooth Development Kit

User's Guide

94001480000
Rev. 2.0, 2002-05-29

MOTOROLA
digital dna™

Motorola reserves the right to make changes without further notice to any products herein. Motorola makes no warranty, representation or guarantee regarding the suitability of its products for any particular purpose, nor does Motorola assume any liability arising out of the application or use of any product or circuit, and specifically disclaims any and all liability, including without limitation consequential or incidental damages. “Typical” parameters which may be provided in Motorola data sheets and/or specifications can and do vary in different applications and actual performance may vary over time. All operating parameters, including “Typicals” must be validated for each customer application by customer’s technical experts. Motorola does not convey any license under its patent rights nor the rights of others. Motorola products are not designed, intended, or authorized for use as components in systems intended for surgical implant into the body, or other applications intended to support life, or for any other application in which the failure of the Motorola product could create a situation where personal injury or death may occur. Should Buyer purchase or use Motorola products for any such unintended or unauthorized application, Buyer shall indemnify and hold Motorola and its officers, employees, subsidiaries, affiliates, and distributors harmless against all claims, costs, damages, and expenses, and reasonable attorney fees arising out of, directly or indirectly, any claim of personal injury or death associated with such unintended or unauthorized use, even if such claim alleges that Motorola was negligent regarding the design or manufacture of the part. The Bluetooth trademarks are owned by their proprietor and used by Motorola, Inc., under license. All other product or service names are the property of their respective owners. © Motorola, Inc. 2002.

Motorola and Ⓜ are registered trademarks of Motorola, Inc. Motorola, Inc. is an Equal Opportunity/Affirmative Action Employer.

How to reach us:

USA/EUROPE/Locations Not Listed: Motorola Literature Distribution; P.O. Box 5405, Denver, Colorado, 80217.
1–303–675–2140 or 1–800–441–2447

JAPAN: Motorola Japan Ltd.; SPS, Technical Information Center, 3–20–1, Minami–Azabu, Minato–ku,
Tokyo 106–8573 Japan. 81–3–3440–3569

ASIA/PACIFIC: Motorola Semiconductors H.K. Ltd., Silicon Harbour Centre, 2 Dai King Street,
Tai Po Industrial Estate, Tai Po, N.T., Hong Kong. 852–26668334

Technical Information Center: 1–800–521–6274

HOME PAGE: http://www.motorola.com/semiconductors/

© Copyright Motorola, Inc., 2002

Contents

Chapter 1
Introduction

1.1 About This Guide 1-1
1.2 Additional Documents 1-2
1.3 Downloads and Support 1-3
1.4 Unpacking 1-3
1.5 System Requirements 1-3
1.6 Acronyms and Abbreviations 1-4

Chapter 2
Product Overview

2.1 Block Diagram 2-5
2.2 Interfaces 2-5
2.3 Applications 2-6
2.4 ICs 2-6
2.5 Software Tools 2-6
2.5.1 Bluetooth HCI Terminal 2-7
2.5.2 Configuration Manager 2-7
2.5.3 DemoBench 2-7

Chapter 3
Setup

3.1 Setting Up Board 3-9
3.2 Running UART 3-9
3.3 Running USB 3-9

Chapter 4
Hardware

4.1 Signal and Connection Descriptions 4-11
4.2 Environmental 4-12
4.3 Mechanical 4-12
4.4 Electrical 4-12
4.4.1 Power Supply 4-13
4.4.2 Reset Circuit 4-13
4.4.3 Clocks 4-13
4.4.4 Memory 4-14
4.4.5 UART Interface 4-14
4.4.6 USB Interface 4-14

Motorola Confidential Proprietary, NDA Required / Preliminary

4.4.7 CODEC Interface 4-14
4.4.8 Antenna 4-14
4.5 Reference Designs 4-14

Chapter 5
Limitations

5.1 USB Limitations 5-15

Chapter 6
Regulatory

6.1 Regulatory Statements 6-17
6.1.1 General 6-17
6.1.2 European Union (EU) and EFTA 6-17
6.1.3 France 6-17
6.1.4 Nederland 6-17
6.1.5 United States of America and Canada 6-18
6.1.6 Canada Compliance (Industry Canada) 6-18
6.1.7 Singapore 6-18
6.1.8 Brazil 6-19
6.1.9 Japan 6-19
6.1.10 Taiwan 6-19
6.2 Obtaining Type Approvals 6-20
6.2.1 Requirements for Bluetooth Qualification 6-20
6.2.2 Requirements for regulatory type approvals: 6-20

Appendix A
Board Diagram

Chapter 1
Introduction

NOTE:

Users are not permitted to make changes or modify the device in any way.

With the Development Kit for the Bluetooth Platform Solution from Motorola, the company is launching a unique demonstration and development tool for its platform.

The Development Kit contains all of the hardware, software, and documentation needed to evaluate the functionality of the ICs making up Motorola's Bluetooth platform solution chipset:

- MC71000 Bluetooth Baseband Controller IC
- MC13180 Bluetooth Low Power Wireless Data Transceiver IC
- MC13181 Wireless Power Management IC

Also, you can develop software and hardware solutions around the platform chipset. The Development Kit makes it possible to easily and quickly set up and start demonstrating a Class 2 Bluetooth solution, and it provides an efficient layout for the baseband and RF on an FR4 PCB substrate.

The primary applications of the Development Kit are:

- Evaluation of the platform chipset and its features
- Porting of a user Bluetooth stack to the Motorola Bluetooth hardware
- Prototyping of a Bluetooth-enabled host device
- Reference design for quick layout of a Bluetooth solution based on the MC71000 and MC13180 chipset

The Development Kit is Bluetooth 1.1 qualified and type approved in a great number of countries. See the section "Regulatory".

For detailed information on the ICs making up the platform chipset, please see the technical brief accompanying each of the ICs: MC71000, MC13180, and MC13181. These technical briefs are all included on the CD.

1.1 About This Guide

This user's guide will help you get started with the Bluetooth Development Kit. The guide covers a large number of aspects of using the Development Kit, including:

- Overview of the Development Kit and accompanying documentation
- Instructions on setting up the hardware and software
- Descriptions of the various elements that make up the Development Kit

The following is an overview of the various sections of this user's guide and a brief description of each section:

- Chapter 1, "Introduction" contains an overview of the user's guide and additional documents available from the CD. The introduction is also where to find information on support, unpacking, system requirements, and a list of the acronyms used in this guide.
- Chapter 2, "Product Overview" provides an overview of the Development Kit where the various elements of the product are described briefly.
- Chapter 3, "Setup" explains how to set up the hardware and software to get the Development Kit running.
- Chapter 4, "Hardware" describes the various aspects of the Development Kit hardware
- Chapter 5, "Limitations" describes the limitations of the current Development Kit version. Currently this chapter deals with HCI Limitations only.
- Chapter 6, "Regulatory" contains regulatory statements, a list of the countries where the Development Kit will be type approved, and information on what is needed to obtain type approvals for new products.
- Appendix A, "Board Diagram", contains a diagram of the Development Kit board.

1.2 Additional Documents

In addition to this user's guide, the documentation for the Development Kit includes the following documents. These are all accessible from the document overview on the CD.

- User's Guides for various elements of the Development Kit:
  - *Bluetooth HCI Terminal Guide*
  - *Configuration Manager User's Guide*
  - *DemoBench User's Guide*
  - *Bluetooth Platform Solution Embedded System User's Guide*
  - *Bluetooth Headset Guide*
- Reference designs: *Bluetooth Platform Solution Reference Designs* including descriptions and schematics
- A platform document providing a system overview of the Bluetooth Platform Solution from Motorola
- Technical briefs for the various Bluetooth platform elements:
  - *MRFIC2408 External Power Amplifier IC*
  - *MC13180 Bluetooth Low Power Wireless Data Transceiver IC*
  - *MC13181 Wireless Power Management IC*
  - *MC71000 Bluetooth Baseband Controller IC*
  - *Bluetooth Development Kit*
- Application notes for the following:
  - *Using the Bluetooth Audio Signal Processor (BTASP) for High-Quality Audio Performance*
  - *Motorola's Bluetooth Solution to Interference Rejection and Coexistence with 802.11*

Motorola Confidential Proprietary, NDA Required / Preliminary

  - — *Enhancing ISM Band Performance Using Adaptive Frequency Hopping*
- Product Errata
- Data sheets and information for components on the Development Kit:
  - — CODEC
  - — USB
  - — UART Level Converter
  - — EEPROMs
  - — Crystals
- Bluetooth Core Specification v1.1

1.3 Downloads and Support

For Development Kit software and documentation downloads, go to the following website: http://www.btpo.net

In addition, you may find useful information on the following websites: http://www.motorola.com and http://www.motorola.com/semiconductor/bluetooth

For support on your Development Kit, contact your local FAE.

1.4 Unpacking

The Bluetooth Development Kit sales package contains the following items:

- Development kit boards (2)
- Power supplies (2)
- RS232 cables (2)
- USB cables (2)
- Antennas (2)
- Headsets (2)
- Installation CD including software tools and documentation (1)

1.5 System Requirements

To install and use the Bluetooth Development Kit, you will need the following:

- A PC equipped with Windows® 98/98 SE/Me/2000
- At least a 600 MHz processor (or higher)

Motorola Confidential Proprietary, NDA Required / Preliminary

1.6 Acronyms and Abbreviations

Throughout this guide, the following acronyms and abbreviations are used:

EEPROM	Electrically Erasable/Programmable Read Only Memory
Rx	Receive(r)
SEEPROM	Serial Electrically Erasable/Programmable Read Only Memory
SPI	Serial Peripheral Interface The SPI Bus made by Motorola handles all serial communication with a number of different RF front ends and SEEPROMs.
SSI	Synchronous Serial Interface
Tx	Transmit(ter)
UART	Universal Asynchronous Receiver Transmitter

Chapter 2
Product Overview

This section contains a brief overview of the Development Kit. More detailed information on the various elements of the Development Kit is included in later sections and in the separate user's guides included on the CD.

2.1 Block Diagram

The following figure shows the Development Kit block diagram:

Figure 2-1. Block Diagram

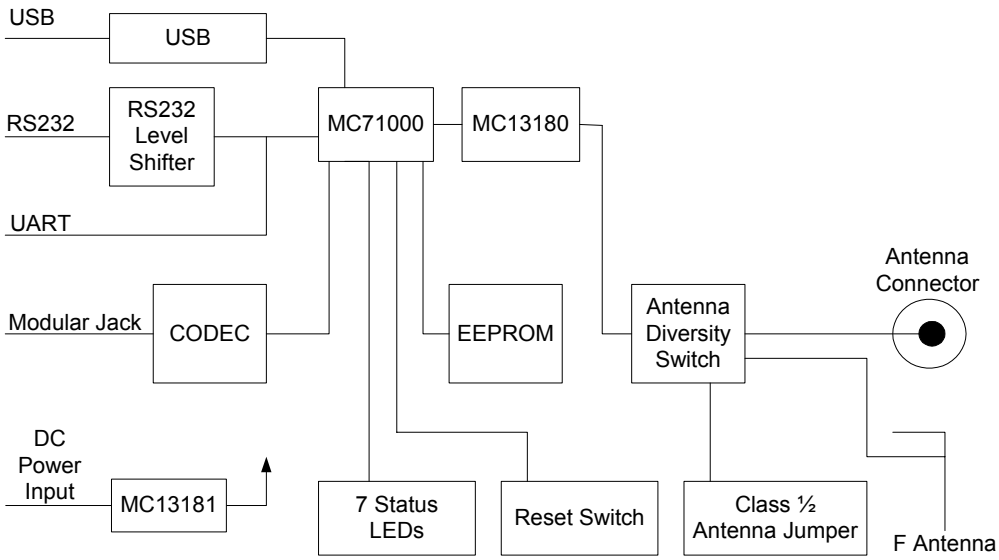

2.2 Interfaces

The development kit features RS232, UART, and USB interfaces:

- RS232 interface: Programmable baud rate from 1200 to 921 Kbit.
- UART interface: 5-pin header with RxD, CTS, RTS, and GND, 3.3 V signaling, programmable baud rate from 1200 to 921 Kbit, HCI UART transport layer.

NOTE:

The UART and RS232 interfaces cannot operate simultaneously.

- USB interface: Full speed (12 Mbit/s) USB node device, HCI USB transport layer, 3.3 V operation, self-powered, National USBN9604 USB controller.

  The following list shows the USB limitations:

  — USB interface is for evaluation purposes and only included for ease of use.

  — Supports OpenUSBDI-compatible USB controllers. USB v1.1.

  — Does not support Open HCI.

  — Production release of the MC71000 will not support USB.
- Audio connections, with audio routed either to the CODEC or through the transport layer

2.3 Applications

The Development Kit supports the Headset application. A separate Headset User's Guide is TBD.

2.4 ICs

The Development Kit is supplied with the following Bluetooth ICs from Motorola:

- MC71000 Bluetooth Baseband Controller IC
- MC13180 Bluetooth Low Power Wireless Data Transceiver IC
- MC13181 Wireless Power Management IC

Future Development Kit releases will contain the MRFIC2408 External Power Amplifier IC.

2.5 Software Tools

The Bluetooth Development Kit is accompanied by the following software tools:

- Bluetooth HCI Terminal
- Configuration manager
- DemoBench

The following sections describe briefly each of the software tools. A separate user's guide for each tool is included on the Development Kit CD.

Motorola Confidential Proprietary, NDA Required / Preliminary

2.5.1 Bluetooth HCI Terminal

With the Bluetooth HCI Terminal you can interact with your Bluetooth hardware. The interface is similar to that of an AT Terminal application when communicating with a modem. The Bluetooth HCI Terminal makes it easy to send HCI commands from a computer to a Bluetooth device. Likewise, it is easy to receive HCI responses from a Bluetooth device. Consequently, you can get hands-on experience with the HCI. Or you can test your own Bluetooth hardware.

The Bluetooth HCI Terminal is accompanied by the *Bluetooth HCI Terminal Guide*, accessible from the document overview on the CD:

2.5.2 Configuration Manager

The Configuration Manager is an application that allows you to handle the Development Kit file system. With this tool, you can download firmware patches and set up a number of baseband and radio parameters to exercise the board. All parameters are restorable and default settings are stored automatically.

The Configuration Manager is accompanied by a user's guide, accessible from the document overview on the CD.

2.5.3 DemoBench

The DemoBench is a demonstration tool that can be used for a number of purposes. You can send a file to another Bluetooth device, "chat" with another Bluetooth device, and view link and packet statistics in a real-time application.

The DemoBench is accompanied by a user's guide, accessible from the document overview on the CD.

Motorola Confidential Proprietary, NDA Required / Preliminary

Chapter 3
Setup

This section provides instructions for setting up the Development Kit hardware and software.

3.1 Setting Up Board

To get the board up and running, do the following:

1. Connect the board and PC via the UART (RS232) cable.

   NOTE:

   The first time you start up the board, you can only run UART, not USB.

2. Attach power supply to DC connector on board and connect to main electricity supply.
3. Insert the CD in the CD-ROM drive of your PC and follow the onscreen instructions.

3.2 Running UART

To run UART, do the following:

1. Get the board up and running as described above.
2. Download the UART application from the Configuration Manager on the CD.

3.3 Running USB

NOTE:

The first time you start up the board, you can only run UART, not USB. Follow the above setup instructions.

To run USB, do the following:

1. Make sure the power is turned off the board.
2. Connect the board and PC via the UART (RS232) cable.
3. Attach power supply to DC connector on board and connect to main electricity supply.
4. Download the USB application from the Configuration Manager on the CD.

Motorola Confidential Proprietary, NDA Required / Preliminary

5. Within the Configuration Manager, go to Settings>Com Port and select the USB option.
6. Follow the instructions on screen to disconnect the UART (RS232) cable and connect the USB cable.

Motorola Confidential Proprietary, NDA Required / Preliminary

Chapter 4
Hardware

This section provides information on various aspects of the Development Kit hardware. In addition, Appendix A, "Board Diagram", contains a diagram of the Development Kit board.

4.1 Signal and Connection Descriptions

The development kit contains the following connections, switches, and indicators:

- Power supply input
- Modular jack 4/4 connector for mono-audio speaker and microphone (headset application)
- RS232 interface
- UART interface
- USB interface
- Antenna connector
- JTAG allowing interface to MC71000 production test
- Reset switch
- Four control buttons for the headset application
- On/off switch
- Seven status LEDs

The power supplied for the development kit is DC with the ratings stated in the specifications.

An analog audio signal to be transmitted over the Bluetooth connection can be fed into the development kit via the modular jack or as streaming audio through the host interface. It will be converted to digital data and transmitted through the Bluetooth link. A digital audio signal received from a connected Bluetooth device will be converted to an analog audio signal and available at the modular jack or as streaming audio through the host interface (UART, SSI, SPI). The MC71000 has a Bluetooth Audio Signal Processor (BTASP) for superior audio performance.

The RS232/UART interfaces can be used to transfer data and audio between a host and the Bluetooth device. The firmware of the development kit can be upgraded through the RS232/UART interface.

The USB interface is a standard HCI USB interface. This interface can be used to connect the development kit to a PC or other devices with PC-compatible USB connections.

The CODEC is attached to the MC71000 via the SPI (data) and SSI (streaming audio) interfaces.

The antenna connector is an SMA 50 ohm connection.

Motorola Confidential Proprietary, NDA Required / Preliminary

The reset switch can be activated to re-initialize the entire system.

Four buttons are provided for embedded applications:

- Volume up
- Volume down
- Function 1 (connection etc.)
- Function 2 (this is an extra button)

Seven status LEDs are provided:

- Two application-specific LEDs
- Class 2
- 24 MHz/32 kHz
- RX/TX
- Power on
- Diversity (shows which antenna is being used)

4.2 Environmental

This section contains system level environmental information:

- Storage temperature (degrees centigrade):
  - Min. -40
  - Max +125
- Operating temperature (degrees centigrade):
  - Min. -20
  - Max +85

4.3 Mechanical

This section contains system level mechanical information:

- Length: 100 mm
- Width: 100 mm
- Height (PCB with components): 20 mm
- Layout, FR4, 6 layer: 1 mm

4.4 Electrical

This section contains electrical information:

- Input power supply requirements: 3.5-6.5 VDC

- Audio input: 65m Vpp
- Audio output: 1.6 Vpp, modular jack 4/4 connector

The following table shows the current consumption measurements of the circuits of the MC71000 Bluetooth Baseband Controller and MC13180 Bluetooth Low Power Wireless Data Transceiver ICs.

Table 1: Current Consumption Measurements of MC71000 and MC13180 Circuits

DH5 asymmetric RX	50.4 mA	TX rate 57.6 kbits RX rate 723.2 kbits
DH5 asymmetric TX	48.5 mA	TX rate 723.2 kbits RX rate 57.6 kbits
DH5 symmetric	45.8 mA	TX rate 433.9 kbits RX rate 433.9 kbits
HV1	45.8 mA	
HV3	27.8 mA	
Total system in low-power mode	0.130 mA	

Note that the table contains typical values.

4.4.1 Power Supply

The board is fed with power from on-board standard regulators.

The on-board power supply regulators should be fed with the supply provided, which generates the following voltages for the board:

- 1.85 V
- 2.65 V
- 3.3V

4.4.2 Reset Circuit

The board includes a push button for full system reset of the MC71000 and all peripherals.

4.4.3 Clocks

The clocks in the system are as follows:

- Sleep mode clock: 32.768 kHz.
- Active mode clock: 24 MHz from MC13180 radio module

The MC71000 includes an internal oscillator circuit for the 32.768 kHz sleep mode clock. Only an external crystal and a few other components are needed.

Motorola Confidential Proprietary, NDA Required / Preliminary

4.4.4 Memory

The MC71000 has embedded memory of 256 Kbytes of ROM and 64 K of RAM. An image can be uploaded from a host system, or a low-cost serial EEPROM (four-wire connection). For more information on the contents and structure of the MC71000 memory, please refer to the *Bluetooth Platform Solution Embedded System User's Guide.* This is accessible from the document overview on the Development Kit CD.

4.4.5 UART Interface

The UART interface is embedded in the MC71000. However, an external level converter is needed. For this purpose, the MAX3237 1.0 Mbit level converter is used. The level converter is connected to the MC71000 and a female 9-pin D-sub. The connection between the level converter and the MC71000 is passed through a jumper block in order to aid debugging, and, if ever needed, to use a different type of level converter.

4.4.6 USB Interface

The USB interface consists of the National USBN9604 USB device controller. A 3.3 V power supply is used for the USBN 9604.

For information on the USB limitations of the Development Kit, see the section "USB Limitations"

4.4.7 CODEC Interface

The audio interface consists of the Xemics XE3006 CODEC, a 4-pin header and a 4/4p amp connector. As to the power supply for the CODEC, both 1.8 V and 3.3 V are selectable by a "+" formation jumper. Sampling rate is configured at 7.8125 kHz.

4.4.8 Antenna

The Development Kit contains an F entenna and an SMA 50 Ohm antenna connector.

4.5 Reference Designs

The Bluetooth Platform Solution reference designs include the following: Host optimized, host non-optimized, and standalone (headset). Descriptions and schematics are included in the *Bluetooth Platform Solution Reference Designs* document. This is accessible from the document overview on the Development Kit CD.

Motorola Confidential Proprietary, NDA Required / Preliminary

Chapter 5
Limitations

This section deals with the known limitations of the Bluetooth Development Kit.

5.1 USB Limitations

The Bluetooth Development Kit has the following USB limitations:

- The USB interface is for evaluation purposes only. It is only included for the purpose of showing full bandwidth.
- Supports OpenUSBDI-compatible USB controllers. USB V1.1.
- Does NOT support Open HCI.
- No USB logo certification.
- MC71000 does NOT support USB. USB controller is external USBN9604 from National.

For general information on USB, please see www.usb.org.

Chapter 6
Regulatory

This section contains regulatory statements, a list of the countries where the Development Kit will be type approved, and information on what is needed by developers to obtain type approvals for their products.

This device is intended for evaluation and development purposes by professionals only and is NOT for re-sale.

6.1 Regulatory Statements

NOTE:

Users are not permitted to make changes or modify the system in any way. Changes or modifications not expressly approved by the party responsible for compliance could void the user's authority to operate the equipment.

6.1.1 General

This product complies with any mandatory product specification in any country where the product is sold.

6.1.2 European Union (EU) and EFTA

This equipment complies with the R&TTE directive 1999/5/EC and has been provided with the CE mark accordingly.

6.1.3 France

This equipment may only be used as a Class 2 device, not as a Class 1 device. Note also that only indoor use is allowed.

6.1.4 Nederland

(Applies to **20dBm** products only)

Niet voor gebruik in de buitenlucht.

Deze apparatuur is uitsluitend bedoeld voor gebruik binnenshuis.

6.1.5 United States of America and Canada

Tested to comply with FCC Standards FOR HOME OR OFFICE USE. See FCC 47CFR part 15.19(b)(2)

This device complies with part 15 of the FCC rules and with RSS-210 / RSS-139 of the Industry Canada. Operation is subject to the following two conditions: (1) This device may not cause harmful interference, and (2) this device must accept any interference received, including interference that may cause undesired operation. See FCC regulation CFR47 sec. 15.19(3).

This equipment has been tested and found to comply with the limits for a Class B digital device, pursuant to part 15 of the FCC Rules. These limits are designed to provide reasonable protection against harmful interference in a residential installation. This equipment generates, uses and can radiate radio frequency energy and, if not installed and used in accordance with the instructions, may cause harmful interference to radio communications. However, there is no guarantee that interference will not occur in a particular installation. If this equipment does cause harmful interference to radio or television reception, which can be determined by turning the equipment off and on, the user is encouraged to try to correct the interference by one or more of the following measures:

- Reorient or relocate the receiving antenna
- Increase the separation between the equipment and receiver
- Connect the equipment into an outlet on a circuit different from that to which the receiver is connected
- Consult the dealer or an experienced radio/TV technician for help

In order to comply with FCC RF Exposure requirements, a minimum separation distance of 20 cm must always be maintained between the transmitter antenna and all persons during normal operation.

Note that any changes or modifications to this equipment not expressly approved by the manufacturer may void the FCC authorization to operate this equipment.See FCC regulation CFR47 sec. 15.21.

6.1.6 Canada Compliance (Industry Canada)

To prevent radio interference to the licensed service, this device is intended to be operated indoors and away from windows to provide maximum shielding. Equipment that is installed outdoors is subject to licensing.

In French: Pour empêcher un brouillage radioélectrique au service faisant l'objet d'une licence, cet appareil doit être utilisé à l'interieur et loin des fenêtres afin de founir un écran de blindage maximal. Au cas aù un installation en plain air, le materiel doit faire l'objet d'une licence.

6.1.7 Singapore

This product complies with the standard Infocomm Development Authority of Singapore (IDA) TS SSS amended by the Guidance notes on Bluetooth Type Approval Framework and has been approved by the IDA under the Type Approval Certificate (TAC) number: *Motorola TAC number TBD*

The supplier of this equipment is responsible that the equipment can be used as described in the accompanying documentation. Furthermore, the supplier is responsible for providing proper installation and after-sales maintance of the equipment to meet the user's needs.

Under no circumstances is the IDA liable for the use, installation, or after-sales maintenance of the equipment.

6.1.8 Brazil

Este equipamento opera em caráter secundário, isto é, não tem direito a proteção contra interferência prejudicial, mesmo de estações do mesmo tipo, e não pode causar interferência a sistemas operando em caráter primário.

6.1.9 Japan

この機器の使用周波数帯では、電子レンジ等の産業・科学・医療用機器のほか工場の製造ライン等で使用されている移動対識別用の構内無線局（免許を要する無線局）及び特定小電力無線局（免許を要しない無線局）が運用されています。

1 この機器を使用する前に、近くで移動体識別用の構内無線局及び特定小電力無線局が運用されていないことを確認してください。

2 万一、この機器から移動体識別用の構内無線局に対して電波干渉の事例が発生した場合には、速やかに使用周波数を変更するか又は電波の発射を停止した上、下記連絡先にご連絡頂き、混信回避のための処置等（例えば、パーティションの設置など）についてご相談してください。

3 その他、この機器から移動体識別用の特定小電力無線局に対して電波干渉の事例が発生した場合など何かお困りのことが起きたときは、次の連絡先へお問い合わせ下さい。

連絡先：03-3440-3311　(+81-33440-3311)

6.1.10 Taiwan

臺灣

依據低功率射頻電機管理辦法，製造、輸入或販賣低功率射頻電機者應加印第十四條、第十七條及第二十條之規定內容。

第十四條
經型式認證合格之低功率射頻電機，非經許可，公司、商號或使用者均不得擅自變更頻率、加大功率或變更原設計之特性及功能。

第十七條
低功率射頻電機之使用不得影響飛航安全及干擾合法通信；經發現有干擾現象時，應立即停用，並改善至無干擾時方得繼續使用。

前項合法通信，指依電信法規定作業之無線電信。

低功率射頻電機須忍受合法通信或工業、科學及醫療用電波輻射性電機設備之干擾。

第二十條
輸入、製造低功率射頻電機之公司、商號或其使用者違反本辦法規定，擅自使用或變更無線電頻率、電功率者，除依電信法規定處罰外，電信總局並得撤銷其型式認證證明或型式認證標籤。

6.2 Obtaining Type Approvals

Customers of Motorola Bluetooth chipsets will face some Bluetooth qualification and regulatory requirements for their products. The following lists the requirements for the major markets as defined by Digianswer/Motorola as tier 1 countries: Australia, Canada, Europe (15 + 4 EFTA countries), Japan, New Zealand and US. A number of other countries worldwide will accept the test reports made for Europe and/or US approvals.

Motorola chipsets (radio/baseband) are pre-qualified as Bluetooth components. Also any variants of Motorola software stacks will be pre-qualified. The assumption of pre-qualification provides that customers will implement the radio module (radio chip including surrounding components and print layout) without any changes.

6.2.1 Requirements for Bluetooth Qualification

Baseband chipset will be used as a pre-qualified component and do not require re-testing.

Any incorporated variant of Motorola software stack will be used as a pre-qualified component and do not require re-testing.

Radio will need to be re-tested in the product layout for the following 8 (of 16) test cases:

Table 6-1.

TRM/CA/04/E	TX Output Spectrum-Frequency range
TRM/CA/08/E	Initial Carrier Frequency Tolerance
TRM/CA/09/E	Carrier Frequency Drift
TTRC/CA/01/E	Out-of-Band Spurious Emissions-**radiated**
RCV/CA/02/E	Sensitivity-multi-slot packets
RCV/CA/03/E	C/I performance
RCV/CA/04E	Blocking performance
TP/PHYS/TRX/BV-05-C	Symbol rate

If changes are made to the Development Kit radio module BOM or layout, all 16 Bluetooth test cases will be required to be re-tested. Depending on the nature of changes to the radio, re-testing might only be necessary in normal temperature. This has to be decided by the BQB in each case.

6.2.2 Requirements for regulatory type approvals:

The following regulatory testing needs to be made:

- For CE-marking: EN 300 328-2 (emission), EN 301 489-17 (EMC), EN 60950 (safety)
- For Japan approval: ARIB T-66.
- For FCC grant: CFR47 part 15.205, 15.209 and 15.247 (except 15.247e: processing gain)

NOTE:

As Motorola radios will be approved by FCC as radio modules and the

FCC testing can be avoided for regulatory purposes for radio modules, provided no changes are made to the radio module BOM or layout, it will still be necessary to perform the Out-of-Band Spurious Emissions-radiated-test of part 15.209.

The product might be subject to additional product specific regulations, such as PSTN regulations and other.

Type approval applications have to be filed to the national authorities for each product.

Documentation submitted for type approvals can vary from country to country, but will in general include: test reports, pictures, BOM, schematics, PCB layouts, product descriptions (block diagrams), antenna information, SAR statements (see below), label/manual information (legal text) and manufacturer information.

Both in Europe and US regulators are currently working on new sets of rules for combined radio equipment as well as rules for SAR. Test requirements for SAR (including combined radio) will most likely be topical within the next year.

Motorola Confidential Proprietary, NDA Required / Preliminary

Appendix A
Board Diagram

The following pages show a diagram of the Development Kit board.

Motorola Confidential Proprietary, NDA Required / Preliminary

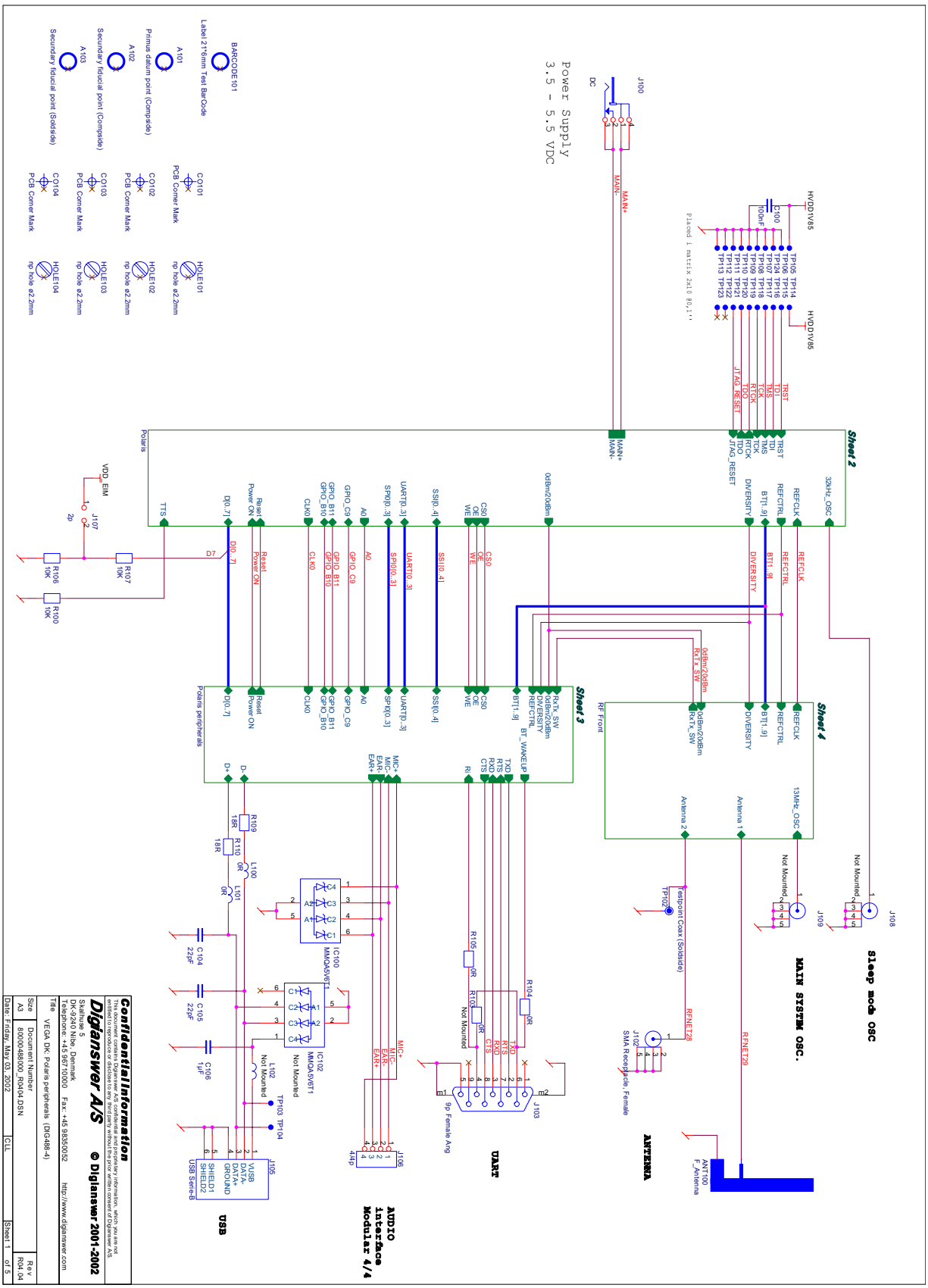

Motorola Confidential Proprietary, NDA Required / Preliminary

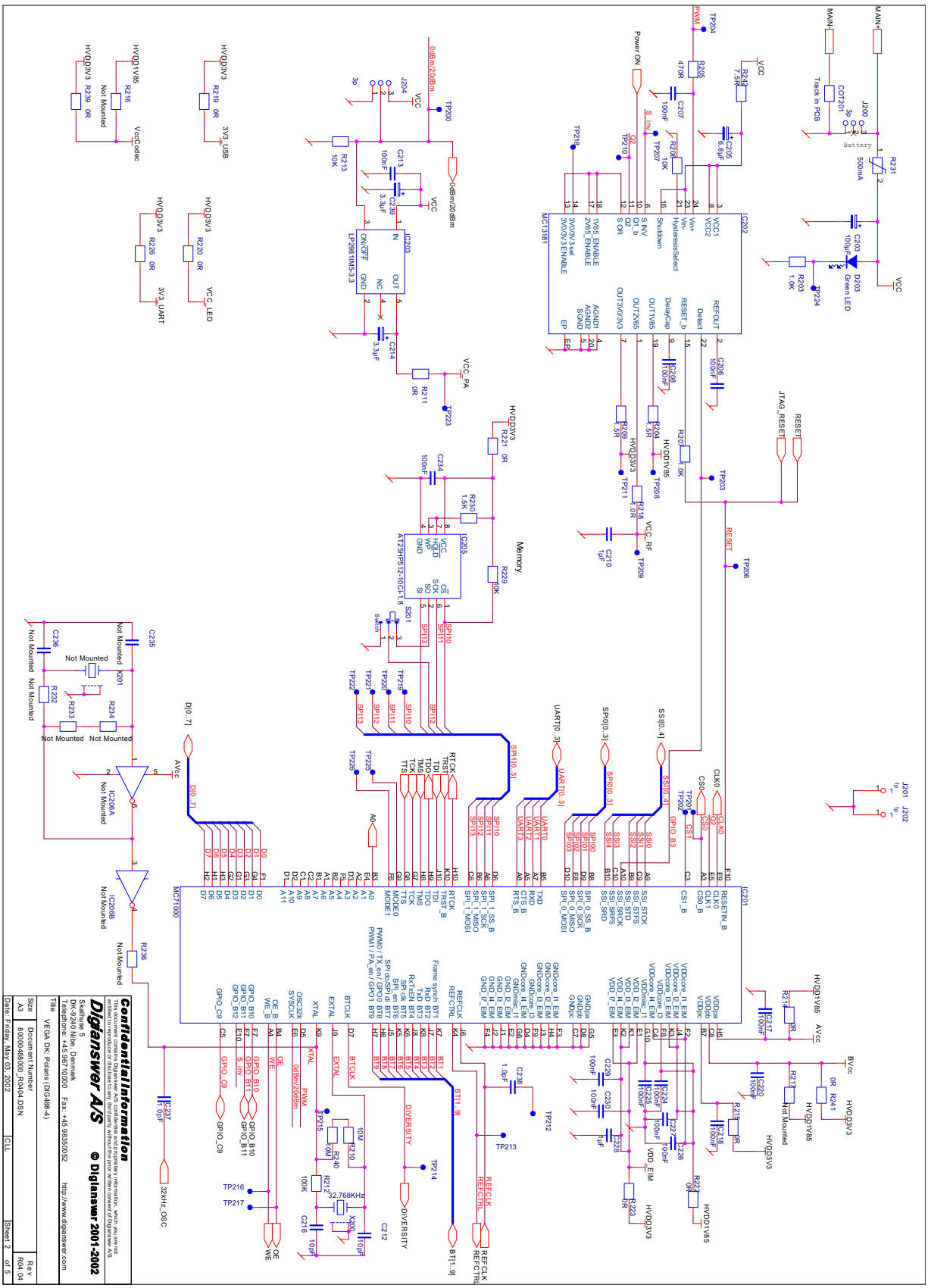

Motorola Confidential Proprietary, NDA Required / Preliminary

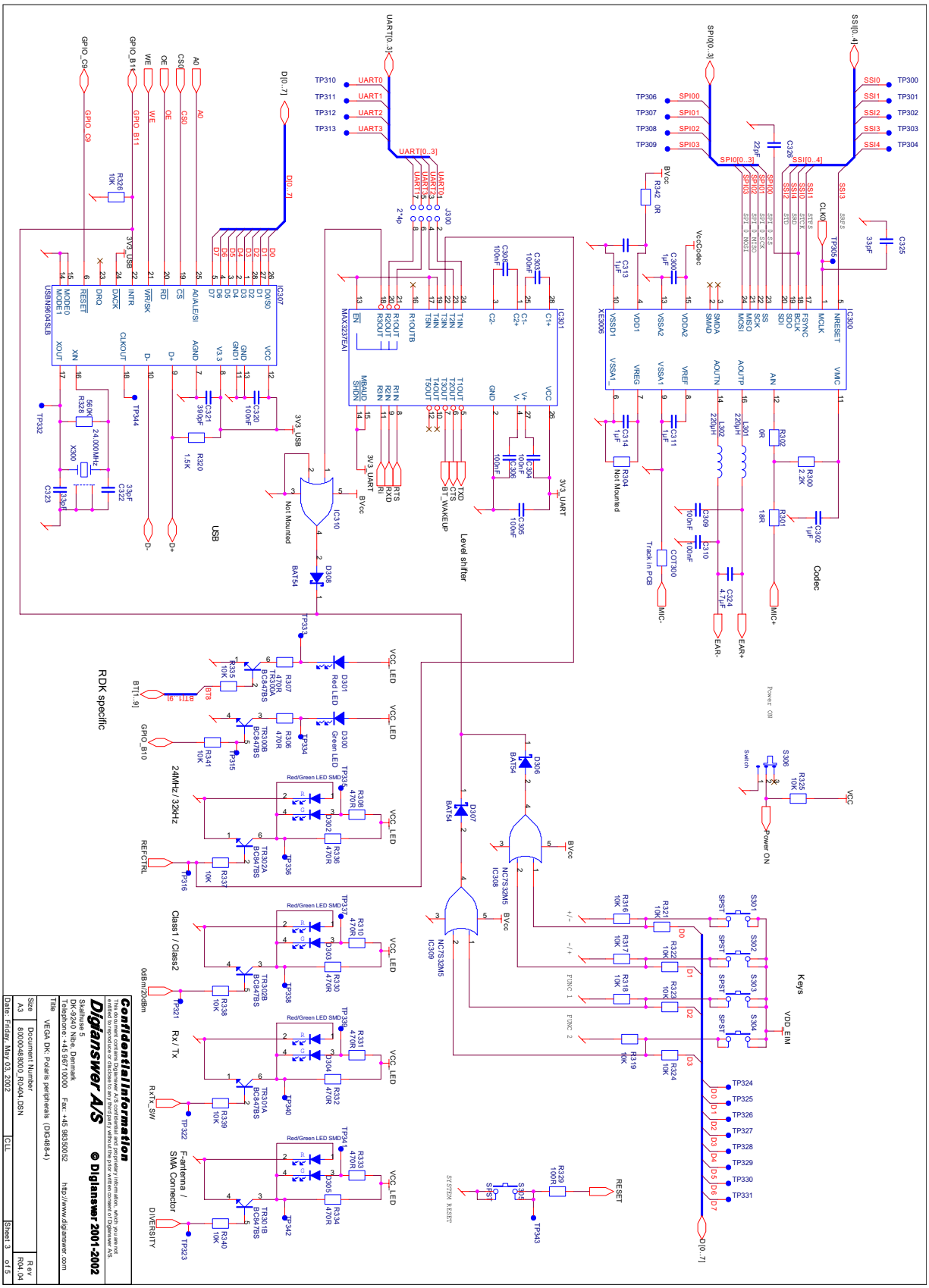

Motorola Confidential Proprietary, NDA Required / Preliminary

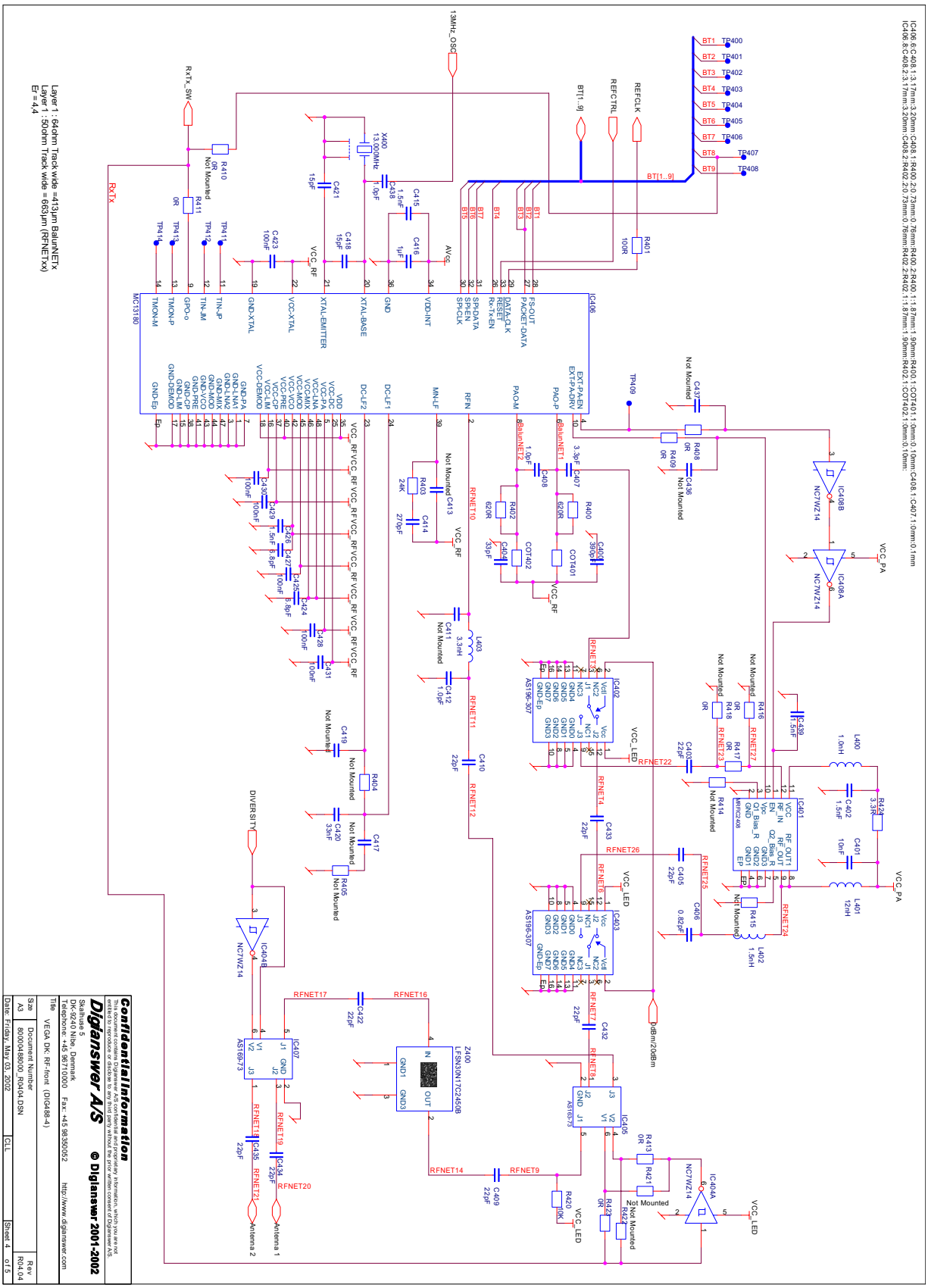

Confidential Information

This drawing is the property of Digianswer A/S. Any information, which may not be published, disclosed or used for any other purpose than stated in writing, is not permitted to reproduce or disclose to any third party without the prior written consent of Digianswer A/S.

Digianswer A/S

Skalhuse 5
DK-9240 Nibe, Denmark
Telephone: +45 9671 0000 Fax: +45 98350552 http://www.digianswer.com

© Digianswer 2001-2002

Title			
VEGA DK: RF-front (DIG488-4)			
Size	Document Number		Rev
A3	800404880/0_R0404.DSN		R0404
Date: Friday, May 03, 2002	CLL		Sheet 4 of 5

Motorola Confidential Proprietary, NDA Required / Preliminary