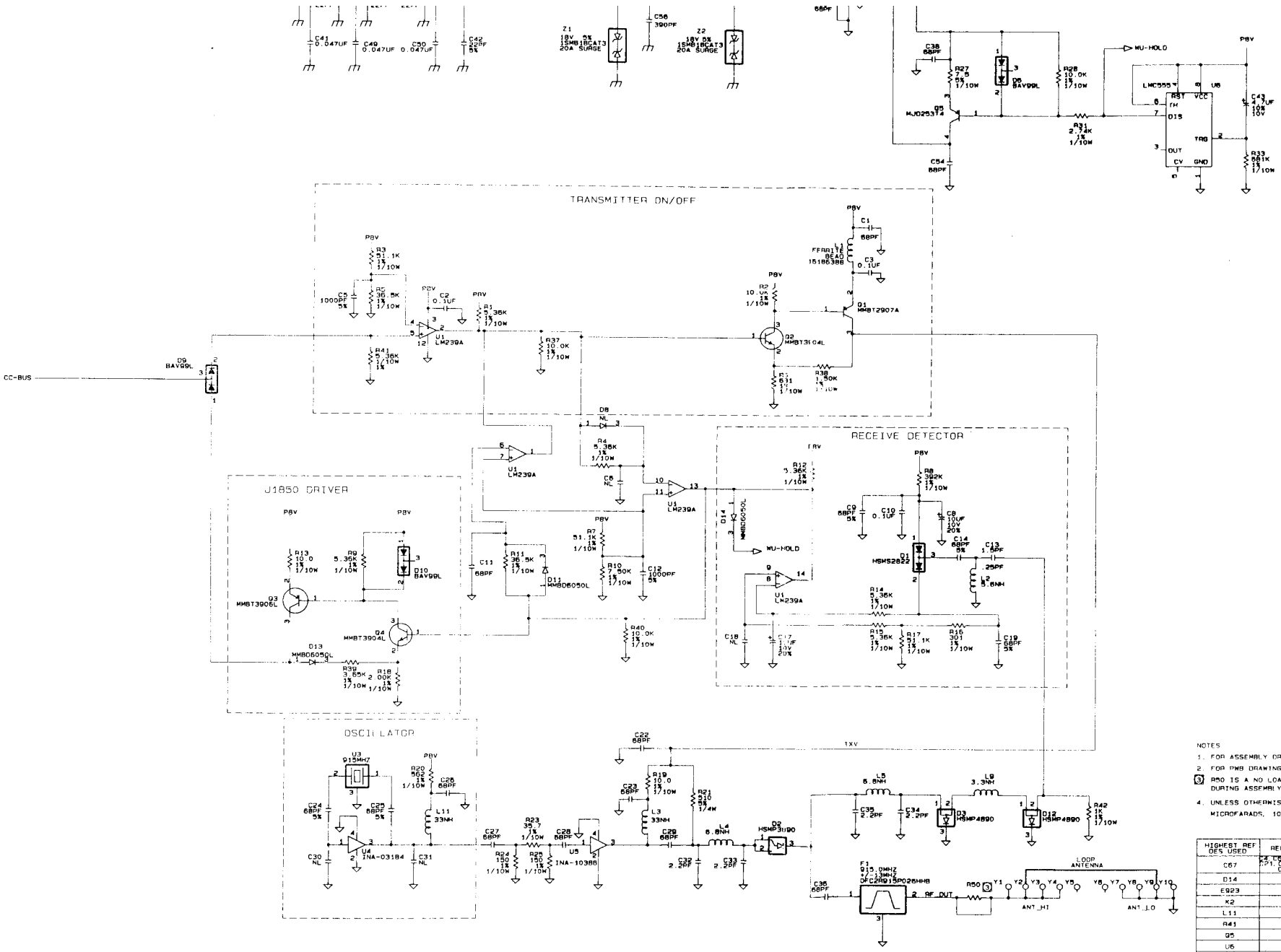

NOTES

1. FOR ASSEMBLY DRAWING SEE 16235639.
2. FOR PWB DRAWING SEE 27004650.
3. R50 IS A NO LOAD PART. NOT TO BE INSTALLED DURING ASSEMBLY
4. UNLESS OTHERWISE SPECIFIED CAPACITORS ARE IN MICROFARADS, 10% 50V. RESISTORS ARE IN OHMS, 1%, 1/8W.

HIGHEST REF DES USED	REF DES NOT USED
C67	C2, C7, C17, C18, C19, C20, C31, C36, C51, C52, C53, C40, C51, C55
D14	D8, D5
E923	E000-E903
K2	-
L11	-
R41	-
Q5	-
U6	-
Y10	-

DRAWING: Tue Apr 14 10:08:18 19

HUGHES AIRCRAFT COMPANY

CONTRACT:

DWN: A. BARRY

CHK: G. ISHI

CHK:

CHK:

CHK:

APVD: PHUNG NGUYEN