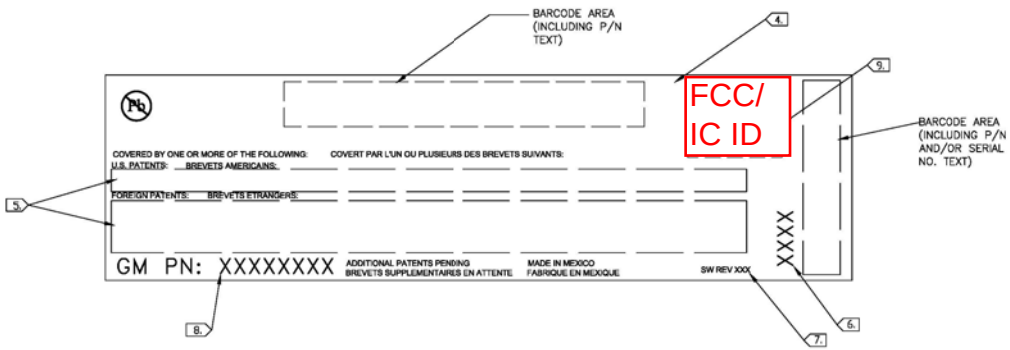

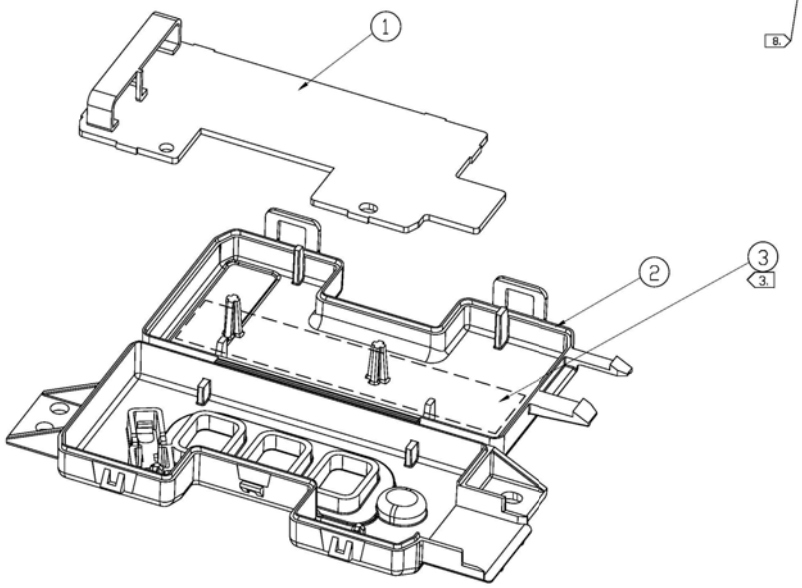

VIEW FOR REFERENCE ONLY

NOTES:

1. ASSEMBLE PARTS AS SHOWN.
2. INDIVIDUAL COMPONENTS ON PCB ASSEMBLY SHOWN FOR REFERENCE ONLY.
3. PLACE BARCODE/PATENT LABEL ITEM 3 ON OUTSIDE OF HOUSING ITEM 2 AT LOCATION INDICATED.
4. ASSEMBLER IS TO PRINT LABEL INFORMATION AS SHOWN. USING ADHESIVE LABEL (ITEM 3). PRE-PRINTED LABEL MUST PROVIDE CLEAR SPACE FOR BARCODE AS INDICATED. ALL TEXT SHALL BE ARIAL FONT, 4 PT., UNLESS OTHERWISE SPECIFIED.
5. REFER TO LATEST REVISION OF DRAWING 1535474, PATENT GROUP AH, FOR ACTUAL PATENT NUMBERS OF THE PATENT GROUP HEADINGS INDICATED. LAY OUT PATENT NUMBERS TO FILL SPACE AVAILABLE, BUT NATION / ORGANIZATION OF ORIGIN ABBREVIATIONS MUST BE MAINTAINED FOR CORRESPONDING PATENT NUMBERS AS SHOWN ON LATEST REVISION OF DRAWING 1535474.
6. PRINT JULIAN DATE CODE AT LOCATION INDICATED. USING THE FORMAT MONTH/DAY/YEAR. TEXT SHALL BE ARIAL FONT, 10 PT.
7. SOFTWARE REVISION SHALL BE PRINTED AT LOCATION INDICATED. THE SOFTWARE REVISION CAN BE FOUND IN THE DESCRIPTION FOR COMPONENT U1000 ON THE PCB ASSEMBLY (ITEM 1) BILL OF MATERIALS.
8. FOR EACH ASSEMBLY, PRINT THE CORRESPONDING GM PART NUMBER FROM THE ASSEMBLY NUMBER TABLE. TEXT FOR GM PART NUMBER SHALL BE ARIAL FONT, 10 PT.
9. FOR EACH ASSEMBLY, PRINT THE CORRESPONDING COLOR DESCRIPTION FROM THE ASSEMBLY NUMBER TABLE.
10. ASSEMBLY MUST COMPLY TO TEST SPECIFICATION TDE-ELE-142.

FOR BILL OF MATERIALS FOR ASSEMBLIES SEE THE FOLLOWING ELECTRONIC FILES INCLUDED IN THE ASSEMBLY DATA RELEASE PACKAGE:

ASSEMBLY NUMBER	REVISION	ELECTRONIC FILE NAME	COLOR DESCIPTION	GM PART NUMBER
1722314	2	1723407_2_BOM.TXT	BLUE / BLEU	13501109
1722316	2	1723407_2_BOM.TXT	GREEN / VERT	13501110
1722317	2	1723407_2_BOM.TXT	WHITE / BLANC	13501111
1722318	2	1723407_2_BOM.TXT	OPEL / ROUGE	13501112
1722319	2	1723407_2_BOM.TXT	RED / ROUGE	NA

REVISION BLOCK

REV	REV ZONE	DESCRIPTION	P.C.N.	BY	DATE	BY
A		RELEASE FOR PROTOTYPE	2711837	BS	30AUG07	EDICT
1		REVISED AND REDRAWN RELEASE FOR PRODUCTION	2790712	BS	02OCT07	EDICT
2		REVISED AND REDRAWN	2893209	BS	07DEC07	EDICT

ELECTRONICS STD. UNLESS OTHERWISE SPECIFIED
THIRD ANGLE PROJECTION IAW ANSI Y14.5M 1982
DO NOT SCALE
X.X DECIMAL ± .5 [.020] X.XX DECIMAL ± .15 [.006] ANGULAR ± 2° 0' DRAFT ANGLES NOTED
DIMENSIONS ARE IN MILLIMETERS WITH EQUIVALENT INCHES SHOWN IN BRACKETS.
SUBSTANCE USE RESTRICTION: THE GLOBAL AUTOMOTIVE DECLARABLE SUBSTANCES LIST (SEE HTTP://WWW.GADSL.ORG) REGARDING PROHIBITED AND DECLARABLE SUBSTANCES APPLIES TO ALL MATERIALS USED IN THIS PART.

JOHNSON CONTROLS
AUTOMOTIVE SYSTEMS GROUP INTERIORS

NAME: ELECTRONIC ASSEMBLY
PROJECT: EPSILON QT HMLK
CUSTOMER: GM
DRWN. BY: BRET SUNNERVILLE DATE: 17SEP07
CHKD. BY: KEITH VANLIERE DATE: 17SEP07
ENGR. APPR: ELIZABETH MELNYK DATE: 17SEP07
SCALE: NONE SHEET 1 OF 1
SIZE: D TOOL NO. REF. DATA FORMAT: ACAD
DWG. NO. 1723407 REV. 2

RELEASED - JCI CONFIDENTIAL