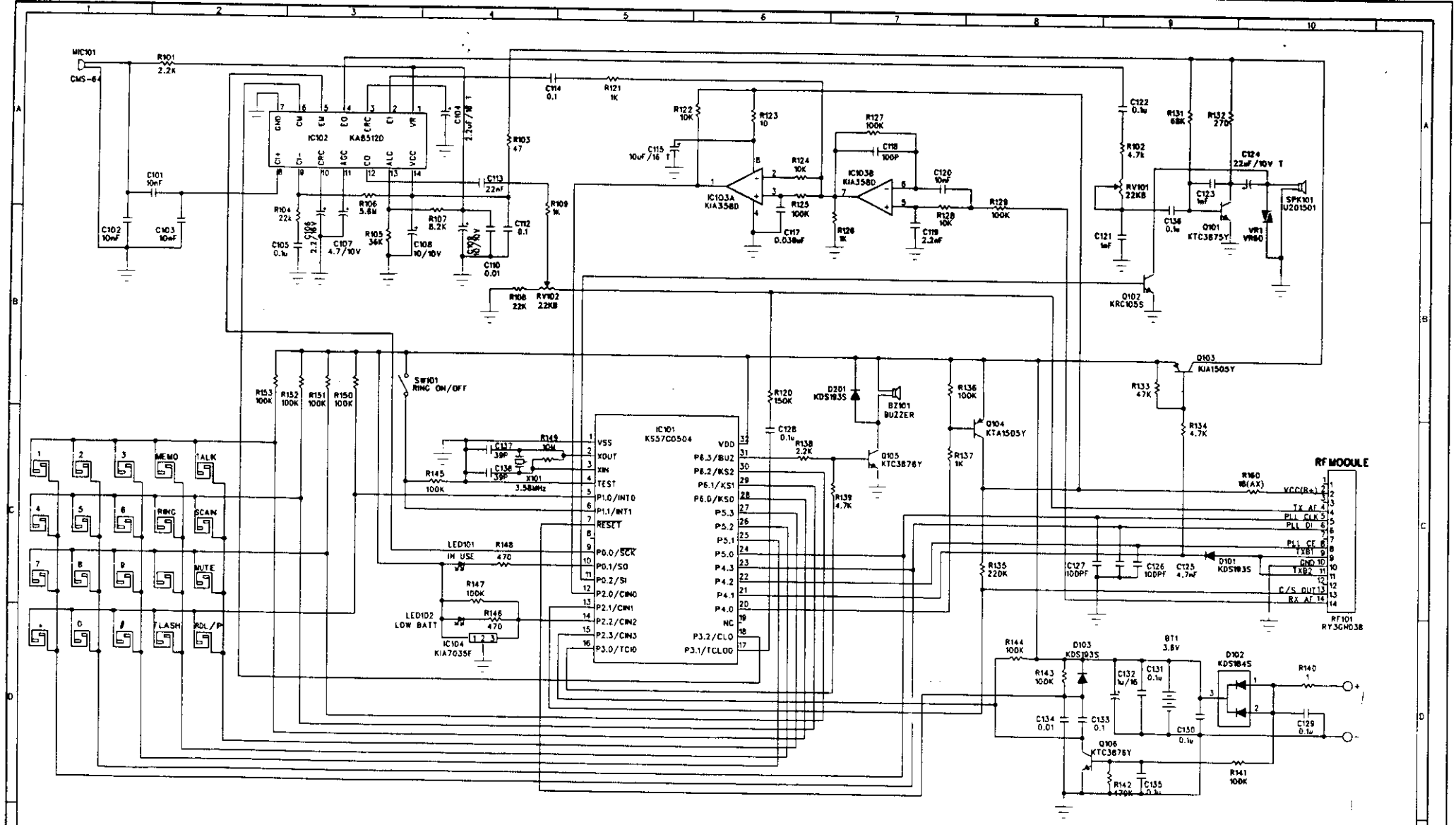
MIC101
CMS-64
R101 2.2K
C101 10nF
C102 10nF
C103 10nF
IC102 KA8512D
GND CW EW EQ ERC CI VR
CI+ CI- CRC AGC CO ALC VCC
C104 2.2uF/16 T
C105 0.1u
C106 2.2/16
C107 4.7/10V
R104 22k
R105 36K
R106 5.6M
R107 8.2K
C108 10/10V
C109 10/10V
C110 0.01
C112 0.1
C113 22nF
R103 47
C114 0.1
R121 1K
R109 1K
R108 22K
RV102 22KB
R122 10K
R123 10
C115 10uF/16 T
IC103A KIA358D
R124 10K
R125 100K
C117 0.038nF
R127 100K
C118 100P
IC103B KIA358D
R126 1K
C120 10nF
R128 10K
C119 2.2nF
R129 100K
C122 0.1u
R102 4.7k
RV101 22KB
C121 1mF
R131 68K
R132 270
C124 22uF/10V T
C123 1mF
C136 0.1u
Q101 KTC3875Y
SPK101 U201501
VR1 VR80
Q107 KRC105S
Q103 KIA1505Y
R133 47K
R134 4.7K
R153 100K
R152 100K
R151 100K
R150 100K
SW101 RING ON/OFF
IC101 K557C0504
VSS XOUT XIN TEST P1.0/INT0 P1.1/INT1 RESET P0.0/SCK P0.1/SO P0.2/SI P2.0/CIN0 P2.1/CIN1 P2.2/CIN2 P2.3/CIN3 P3.0/TCI0
VDD P6.3/BU2 P6.2/KS2 P6.1/KS1 P6.0/KS0 P5.3 P5.2 P5.1 P5.0 P4.3 P4.2 P4.1 P4.0 NC P3.2/CLO P3.1/TCLOO
C137 39P
C138 39P
X101 3.58MHz
R149 10M
R145 100K
LED101 IN USE
R148 470
R147 100K
LED102 LOW BATT
R146 470
IC104 KIA7035F
D201 KDS193S
BZ101 BUZZER
Q105 KTC3876Y
C128 0.1u
R138 2.2K
R139 4.7K
R120 150K
R136 100K
Q104 KTA1505Y
R137 1K
R135 220K
C127 100PF
C126 100PF
C125 4.7mF
D101 KDS193S
RF MOOULE
RF101 RY3GH038
VCC(B+) TX AF PLL CLK PLL DI PLL CE TXB1 GND TXB2 C/S OUT RX AF
R160 18(AX)
1 2 3 MEMO TALK
4 5 6 RING SCAN
7 8 9 MUTE
* 0 # FLASH RDL/P
R144 100K
R143 100K
D103 KDS193S
C134 0.01
C133 0.1
Q106 KTC3876Y
R142 470K
C135 0.1u
C132 1u/16
C131 0.1u
BT1 3.6V
C130 0.1u
D102 KDS184S
R140 1
C129 0.1u
R141 100K
Section
Date
Sign & Name
Designer
Approved
MODEL
CDH200
Sheet/ Sheets
DRAWING NAME
CDH200H3
Iss.
Notice No
Date
1998.07.16
Name
BELCO
DRAWING NO.
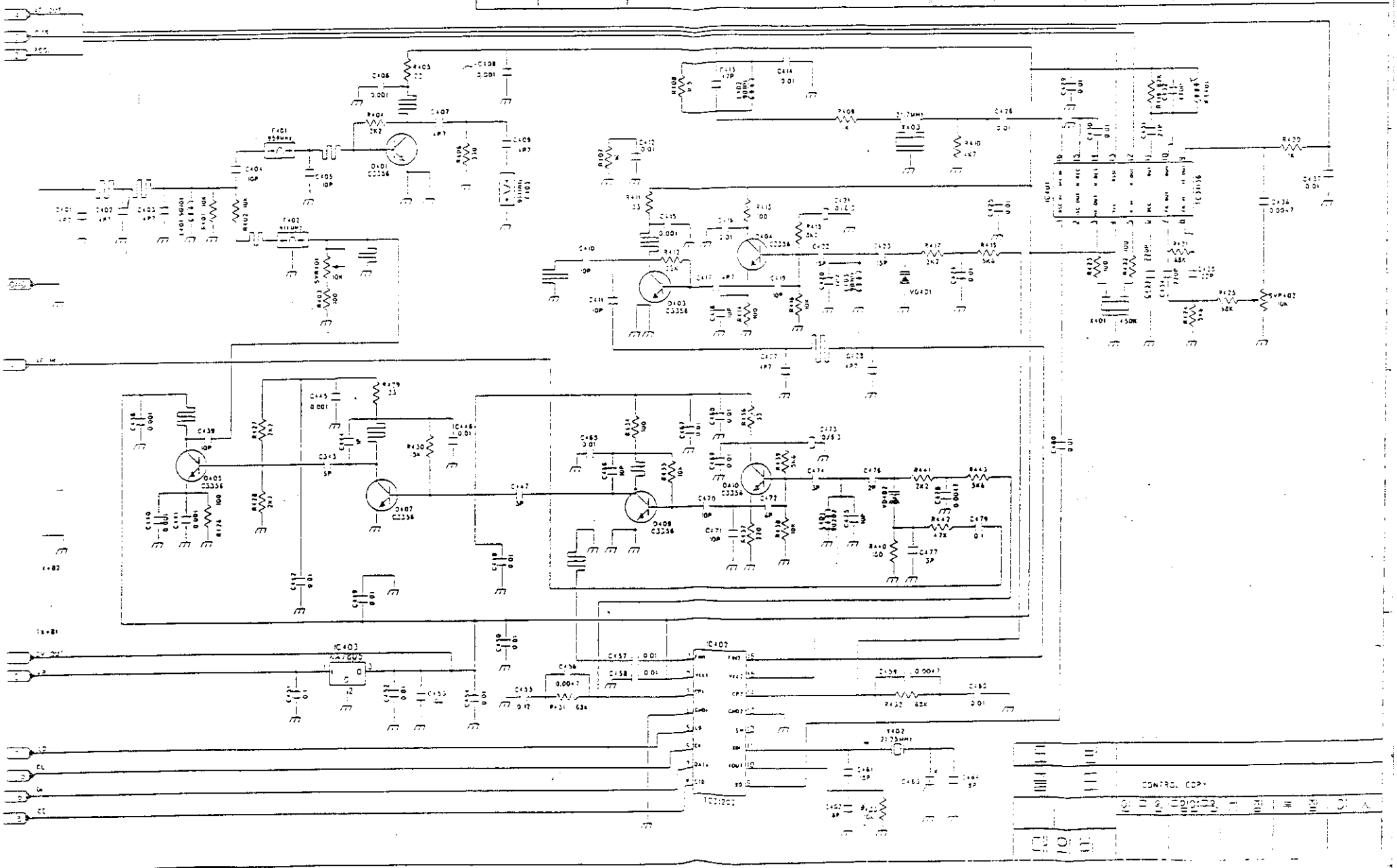
RF MODULE SCHEMATIC DIAGRAM (HAND)