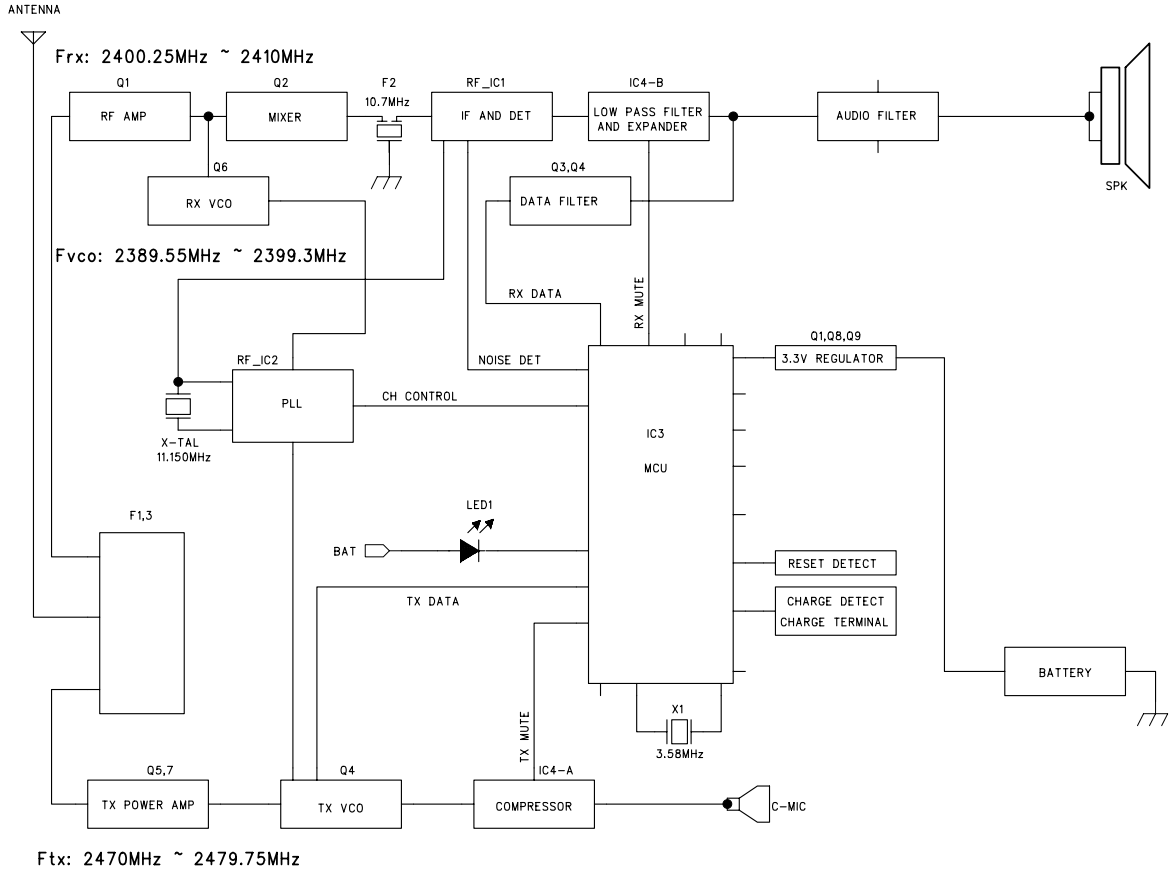

ITEC			NAME	HANDY SET		VIEW	
MODEL NO.	PM2400		DWG.NO.			UNIT	
DRAWN	CHECKED	APPROVED	DATE	Jan.31, 2005		SCALE	/
			SHEET	/	REV.	FILE NAME	