CS8110 / Abe

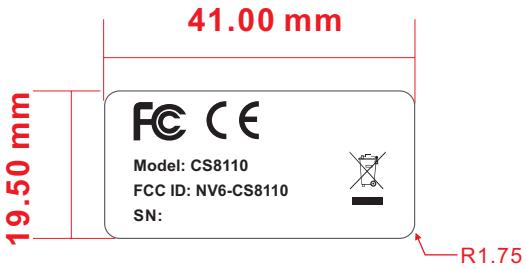
41.00 mm
19.50 mm
Model: CS8110
FCC ID: NV6-CS8110
SN:
R1.75

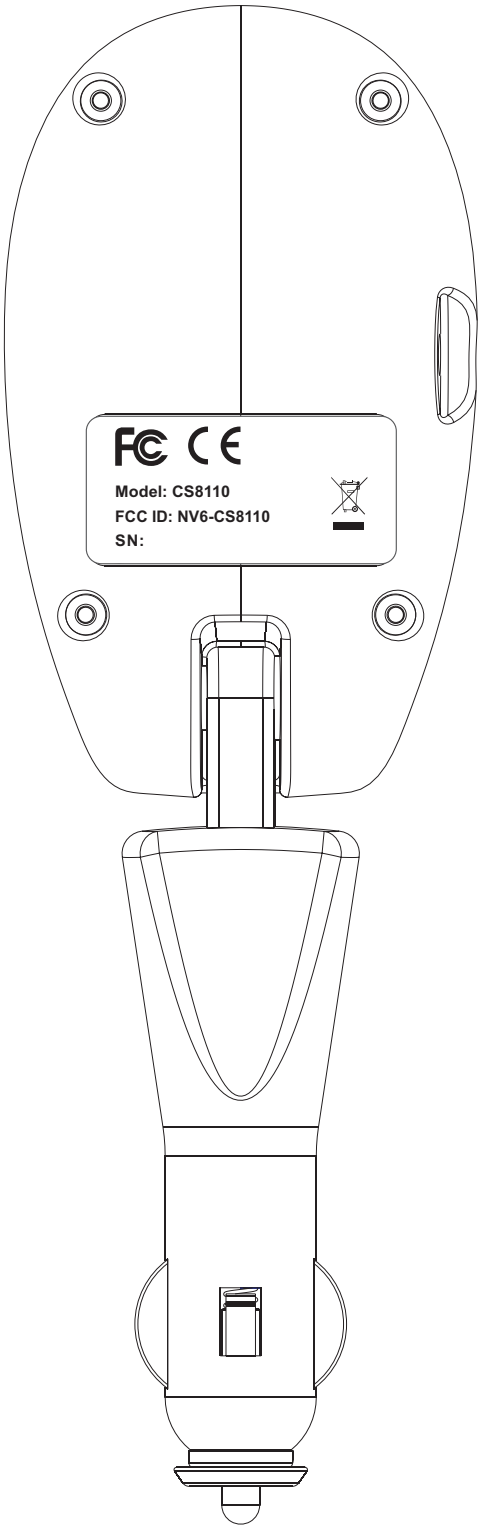
Model: CS8110
FCC ID: NV6-CS8110
SN: