FILE NO. 220

NO MANUAL REVISIONS PERMITTED	RM SERIES		
REV.	CHANGE NO.	DESCRIPTION	REVISED DATE / BY
SEE TABULATION FOR REVISION	-	ENGINEERING REQUEST FOR PRINT PRE-ASSIGN PRODUCTION NUMBER	05APR02 SRB 03MAY02 WPS " "
	-	REVISE "L" TOLERANCE, ADD NOTE 9 REVISE DECAL	23JUL02 SRB 23JUL02 WPS " "

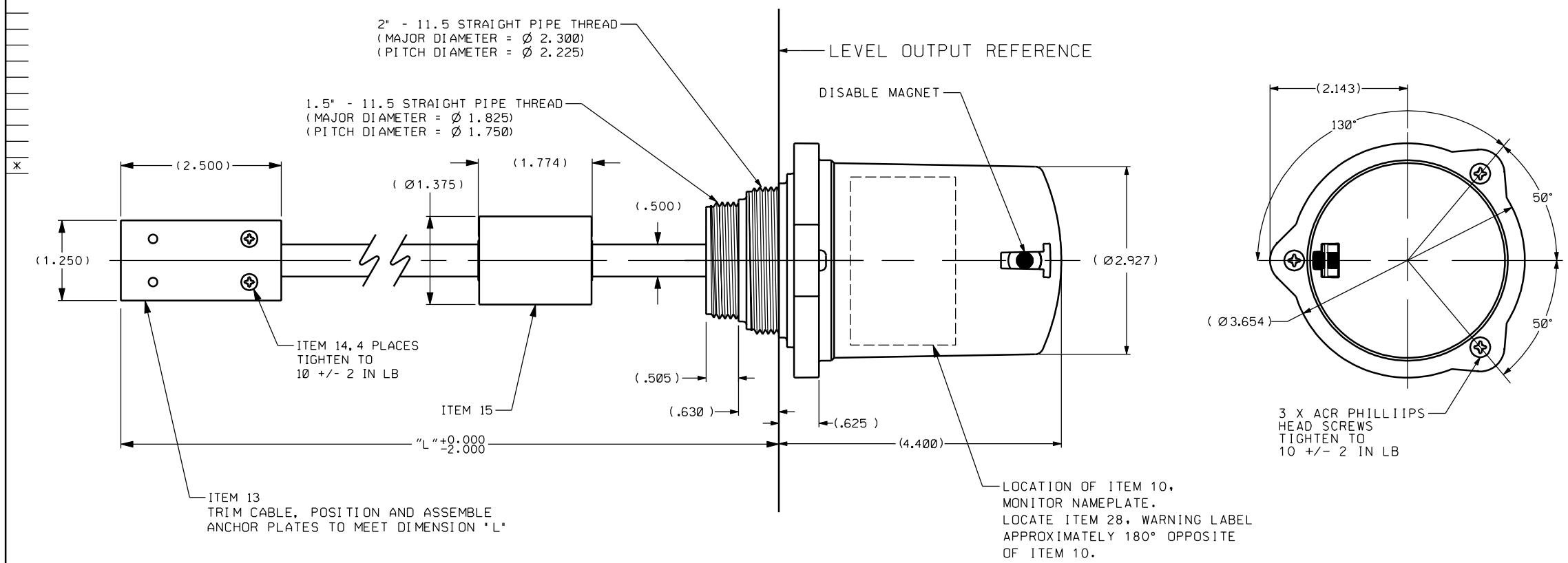

NOTES:
1. FOR CURRENT RELEASE STATUS SEE ENGINEERING NOTICE.
2. PRODUCT MUST CONFORM TO THE FOLLOWING ENGINEERING SPECIFICATIONS:
   ES-TBD
   SIGNIFICANT CHARACTERISTICS:
   A. MEASUREMENT RANGE: MONITOR WILL REPORT LIQUID LEVEL FROM 3.5" TO ("L" - 3.5")
   B. ACCURACY: +/- 1.5% OF "L".
   C. RF RANGE: MIN. 500 FEET.
3. PRODUCT MUST MEET ALL GUIDELINES AND REGULATIONS PER: ES-02026A02 (AXONN RF LICENSING)
4. PRODUCT DESIGNED TO BE TORQUED 1/4 TURN PAST CONTACT OF O-RING GASKET FOR SEALING TO FUEL TANKS. TORQUE NOT TO EXCEED 5 N-M.
5. POWERED BY INTERNAL 3 VDC BATTERY, DURACELL MODEL DL123A, DESIGNED FOR 2 YEAR MINIMUM LIFE BASED ON A 4 HOUR TRANSMIT INTERVAL.
6. HOUSING DESIGNED TO SEAL OUT FOREIGN CONTAMINATES.
   MAJOR CHARACTERISTICS: LEAKAGE MUST BE LESS THAN 20 SCCM OF AIR AT 2.5 PSI.
7. ENGINEERING APPROVAL OF SAMPLES IS REQUIRED PRIOR TO AUTHORIZATION OF PART PRODUCTION.
8. CHANGES IN DESIGN, COMPOSITION, OR PROCESSING FROM PART PREVIOUSLY APPROVED FOR PRODUCTION REQUIRES PRIOR ENGINEERING APPROVAL.
9. PRIOR TO SHIPMENT, POSITION FLOAT ASSEMBLY AGAINST LOWER HOUSING. LOOSELY COIL CABLE AROUND ANCHOR ASSEMBLY WRAPPING PARALLEL TO THE MAJOR AXIS OF THE ANCHOR. SECURE THE CABLE AND ANCHOR WITH A MINIMUM OF THREE COMPLETE WRAPS OF 80 GAUGE CLEAR STRETCH FILM.

THIS DOCUMENT IS THE CONFIDENTIAL PROPERTY OF ROBERTSHAW INDUSTRIAL PRODUCTS. ANY USE, REPRODUCTION, OR REDISTRIBUTION OF THIS DOCUMENT WITHOUT WRITTEN AUTHORIZATION FROM ROBERTSHAW INDUSTRIAL PRODUCTS IS STRICTLY PROHIBITED.

DR. S. BERRY DATE 05APR02 DES. APPD. WPS DWG. CHKD. SLK REQUIRED CERTIFICATIONS	UNLESS OTHERWISE SPECIFIED DIMENSIONS ARE IN INCHES TOLERANCES UNLESS SPECIFIED DECIMALS ±.005 ANGLES ± 1° CAST SURFACES ±.032 REMOVE BURRS- BREAK CORNERS .015 MAX.	Invensys Robertshaw INDUSTRIAL PRODUCTS MARYVILLE, TENNESSEE
SPECIFICATIONS: ANSI Y14.5M-1982 06-70.0150		RADAR LEVEL MONITOR ASSEMBLY
SCALE 1:1	EXP. DRAWING NUMBER 029954RA000	PROD. DWG. NO. RM SERIES REV. SEE TAB

$FILE$

NO MANUAL REVISIONS PERMITTED		RM SERIES		
REV.	CHANGE NO.	DESCRIPTION	REVISED DATE	BY
SEE TAB	-	SEE SHEET 1	05APR02 - -	SRB - -

FILE NO.

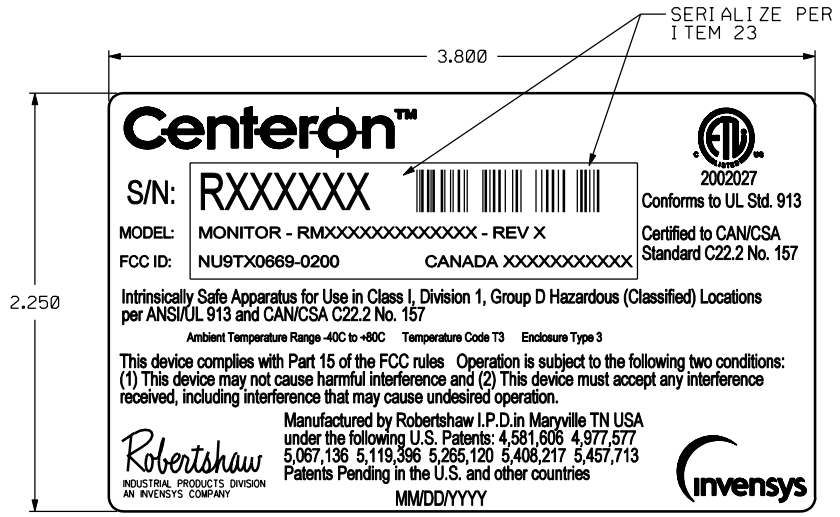

MONITOR NAMEPLATE
SCALE 2:1

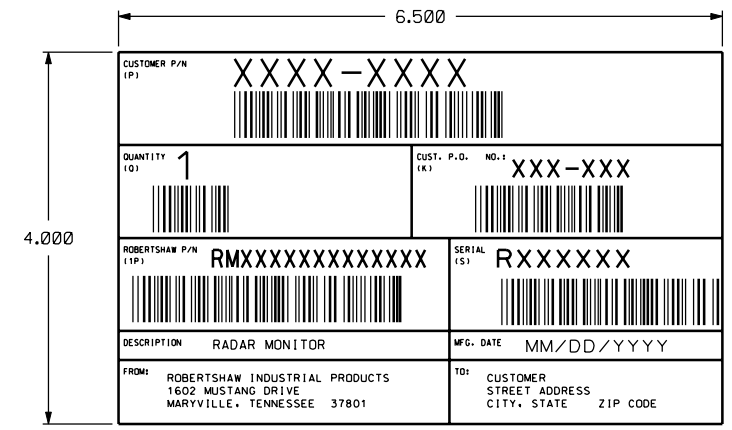

SHIPPING LABEL
SCALE 1:1

REV	PART NUMBER	ITEM 1	CUSTOMER	TRANSMIT INTERVAL	TRANSMIT PROTOCOL	PROBE LENGTH "L" +0.000 -2.000	PROPERTY CODE	SPECIAL REQ.	TRANSMIT ID	SPREAD SPECTRUM CHANNEL
1	RM030EI070F9000	029954R0020	GENERAL MARKET	34 (2 X 17)	EBMP	70"	F9	-	111	1
1	RM060EI070F9000	029954R0020	GENERAL MARKET	68 (4 X 17)	EBMP	70"	F9	-	111	1
1	RM120EI070F9000	029954R0020	GENERAL MARKET	119 (7 X 17)	EBMP	70"	F9	-	111	1
1	RM240EI070F9000	029954R0020	GENERAL MARKET	238 (14 X 17)	EBMP	70"	F9	-	111	1
1	RM030EI144F9000	029954R0021	GENERAL MARKET	34 (2 X 17)	EBMP	144"	F9	-	111	1
1	RM060EI144F9000	029954R0021	GENERAL MARKET	68 (4 X 17)	EBMP	144"	F9	-	111	1
1	RM120EI144F9000	029954R0021	GENERAL MARKET	119 (7 X 17)	EBMP	144"	F9	-	111	1
1	RM240EI144F9000	029954R0021	GENERAL MARKET	238 (14 X 17)	EBMP	144"	F9	-	111	1

R M [ ][ ][ ] E I 0 0 0 [ ][ ] 0 0 0

TRANSMIT INTERVAL

030	30 MINUTE TRANSMIT INTERVAL
060	60 MINUTE TRANSMIT INTERVAL
120	120 MINUTE TRANSMIT INTERVAL
240	240 MINUTE TRANSMIT INTERVAL

PROTOCOL

E	EBMP

PACKAGING

I	INDIVIDUAL PACK

PROPERTY CODE

F9	GENERAL MARKET

PROBE LENGTH ✳

070	70" ± .500"
144	144" ± .500"

✳ PROBES CAN BE TRIMMED BY THE CUSTOMER FOR OTHER TANK SIZES

ITEM	PART NUMBER	QTY	DESCRIPTION
31	040011A0001	.001 (REF)	THERMAL RIBBON
30	039959A0001	2	LABEL
29	039972A0001	1	WARNING DECAL
28	TBD	1 (REF)	MANUFACTURING PROCESS INSTRUCTION
27	TBD	1 (REF)	CONTROL PLAN
26	TBD	1 (REF)	PROCESS FMEA
25	TBD	1 (REF)	DESIGN FMEA
24	TBD	1 (REF)	RADAR MONITOR ASSY, TEST, AND CAL
23	ES-02040A01	1 (REF)	CENTERON SERIALIZATON SPEC.
22	ES-02026A02	1 (REF)	AXONN RF LICENSE
21	TBD	1	INSTRUCTION MANUAL
20	TBD	1	QUICK INSTALLATION LEAFLET
19	039864A0003	.001 (REF)	UL THERMAL RIBBON
18	038418D0001	1	SHIPPING LABEL
17	039984A0003	.083	BULK PACK CONTAINER
16	039984A0002	1	SHIPPING CONTAINER
15	029950R0003	1	FLOAT ASSEMBLY
14	033713K1309	4	ANCHOR SCREWS
13	029954R0006	2	ANCHOR PLATES
12	036240N0225	1	Ø 1.5" MOUNTING O-RING
11	036240N0229	1	Ø 2" MOUNTING O-RING
10	039913A0001	1	MONITOR NAMEPLATE
9	086607A0001	1	MAGNET ASSEMBLY
8	039912A0001	3	UPPER HOUSING MOUNTING SCREWS
7	039890A0001	1	UPPER HOUSING
6	036240N0039	2	UPPER HOUSING O-RING
5	039911A0001	1	BATTERY
4	039867A0003	1	AXONN CUSTOM ASIC
3	029955RA006	1	PRINTED CIRCUIT ASSEMBLY
2	039898A0001	1	TIE WRAP, BATTERY
1	SEE TAB	1	LOWER HOUSING/CABLE ASSEMBLY

THIS DOCUMENT IS THE CONFIDENTIAL PROPERTY OF ROBERTSHAW INDUSTRIAL PRODUCTS. ANY USE, REPRODUCTION, OR REDISTRIBUTION OF THIS DOCUMENT WITHOUT WRITTEN AUTHORIZATION FROM ROBERTSHAW INDUSTRIAL PRODUCTS IS STRICTLY PROHIBITED.

DR. S. BERRY
DATE 05APR02
DES. APPD. WPS
DWG. CHKD. SLK
REQUIRED CERTIFICATIONS

UNLESS OTHERWISE SPECIFIED DIMENSIONS ARE IN INCHES
TOLERANCES UNLESS SPECIFIED
DECIMALS ±.005
ANGLES ± 1°
CAST SURFACES ±.032
REMOVE BURRS-
BREAK CORNERS .015 MAX.

SPECIFICATIONS: ANSI Y14.5M-1982
06-70.0150

SCALE 1:1
EXP. DRAWING NUMBER 029954RA000

invensys Robertshaw
INDUSTRIAL PRODUCTS
MARYVILLE, TENNESSEE

RADAR LEVEL MONITOR ASSEMBLY

PROD. DWG. NO. RM SERIES
REV. SEE TAB

$FILE$