ROBERTSHAW FLEXIBLE PROBE MONITOR BLOCK DIAGRAM

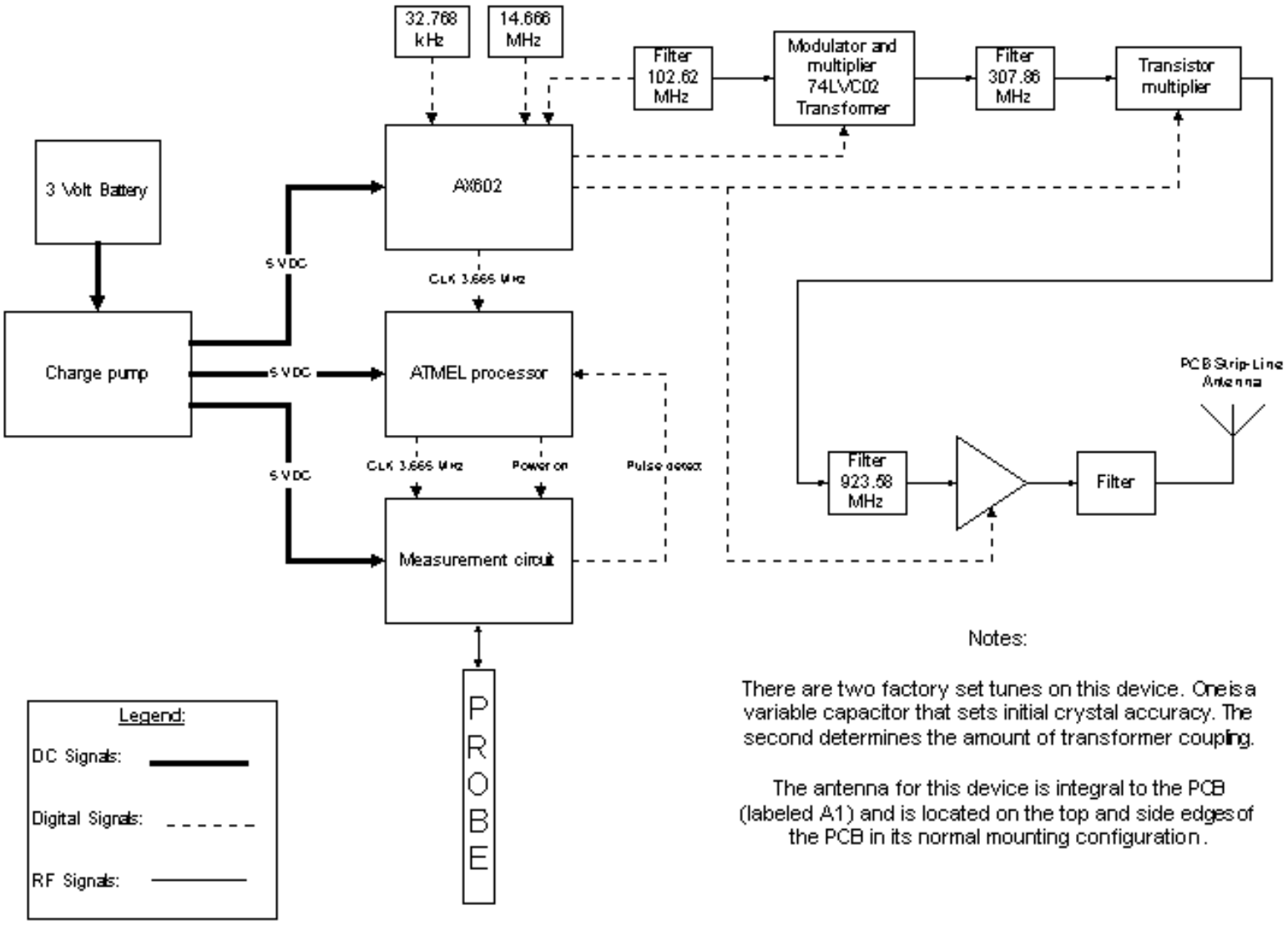

Notes:

There are two factory set tunes on this device. One is a variable capacitor that sets initial crystal accuracy. The second determines the amount of transformer coupling.

The antenna for this device is integral to the PCB (labeled A1) and is located on the top and side edges of the PCB in its normal mounting configuration.