B3 0101 SCIF CONFORMAL COATING AND FREE AREAS

▨ CONFORMAL COATING APPLIED BY VISTEON
☐ FREE AREAS / NO CONFORMAL COATING APPLIED (C8)

—·— NOMINAL SPRAY LINE (C2)

NOTE: ACTUAL APPLICATION OF CONFORMAL COATING CAN DEVIATE FROM THE NOMINAL SPRAY LINE, BUT THE COATING AREAS AND FREE AREAS ARE HONORED (C3)

TOP SIDE / CONNECTOR SIDE

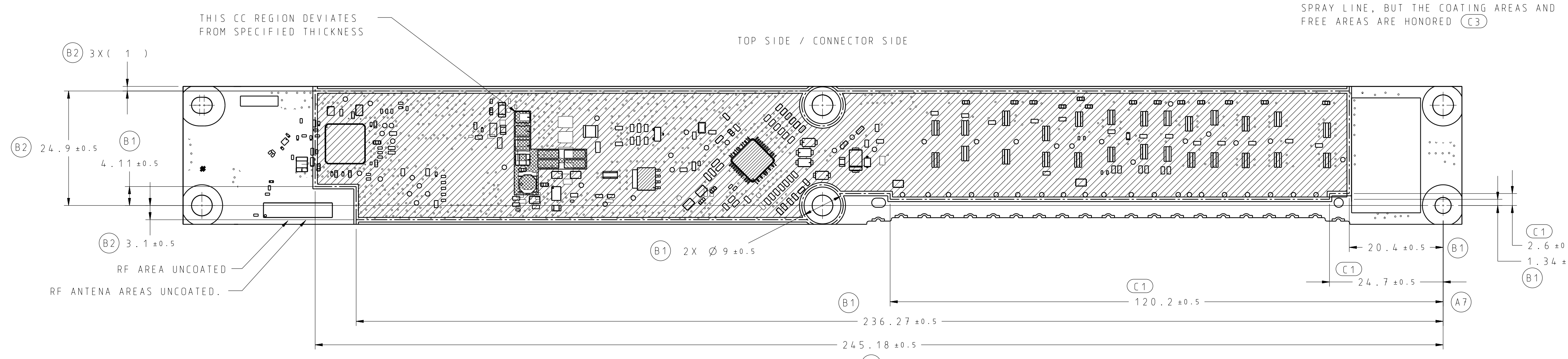
THIS CC REGION DEVIATES FROM SPECIFIED THICKNESS
B2 3X (1)
B2 24.9 ±0.5
B1 4.11 ±0.5
B2 3.1 ±0.5
RF AREA UNCOATED
RF ANTENA AREAS UNCOATED.
B1 2X Ø 9 ±0.5
20.4 ±0.5 B1
C1 2.6 ±0.5
1.34 ±0.5 B1
C1 24.7 ±0.5
C1 120.2 ±0.5 A7
B1
236.27 ±0.5
245.18 ±0.5
B1

(C9)

(A3) (B4)

BOTTOM SIDE
(NO CONFORMAL COATING ON THIS SIDE OF PWB)

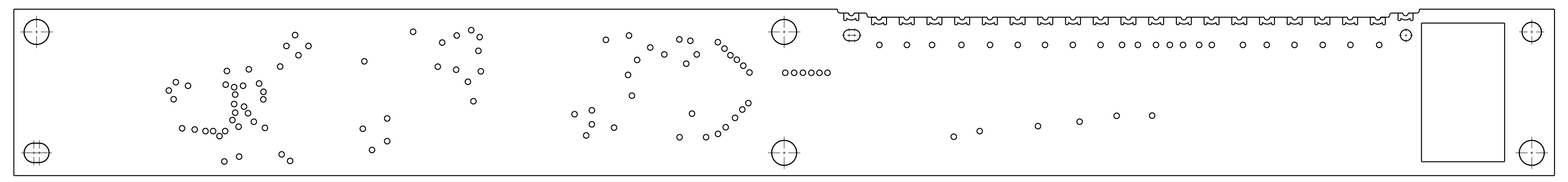

"B3", "B4" AND "C" SAMPLES ARE ALL FOLLOWING THE CONFORMAL COATING REQUIREMENTS SPECIFIED ON THIS DRAWING

(A6)

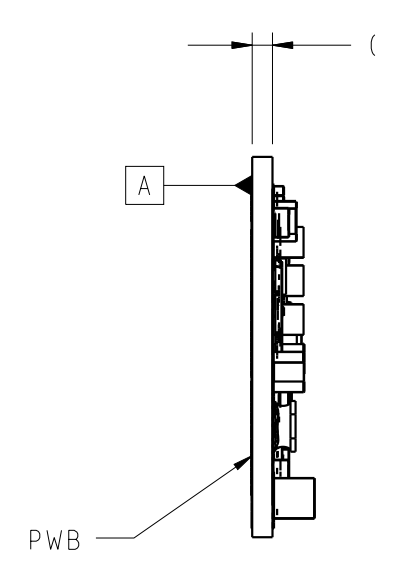

(A4)

REF ONLY

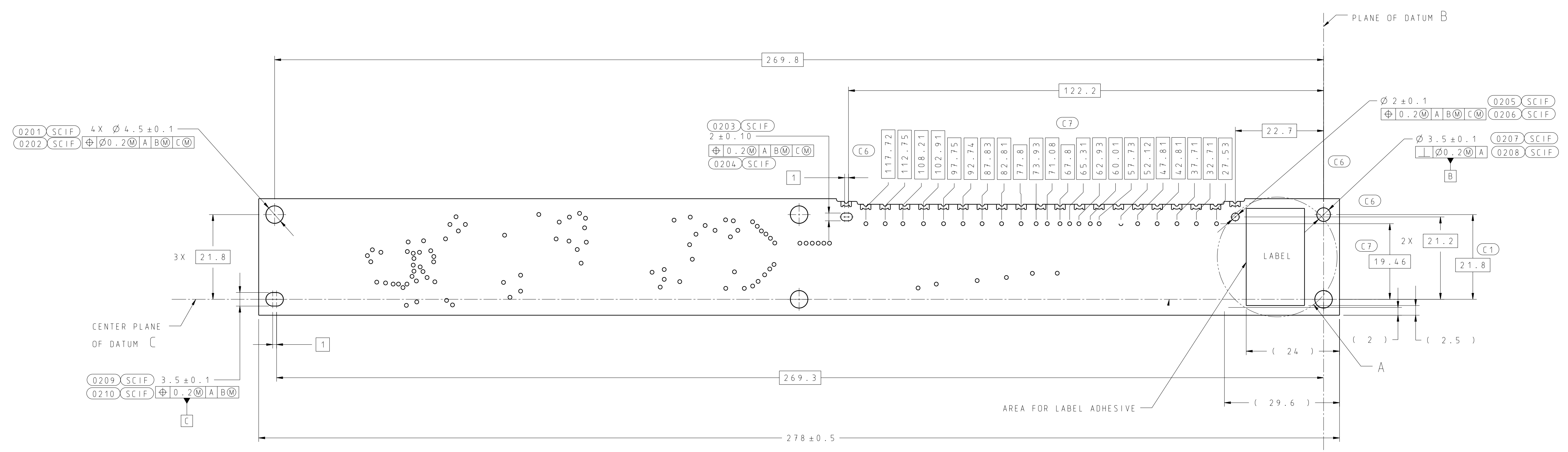
PLANE OF DATUM B
269.8
122.2
0201 SCIF 4X Ø 4.5 ±0.1
0202 SCIF ⌖ Ø0.2Ⓜ A BⓂ CⓂ
0203 SCIF 2 ±0.10
⌖ 0.2Ⓜ A BⓂ CⓂ
0204 SCIF
C6
C7
117.72
112.75
108.21
102.91
97.75
92.74
87.83
82.81
77.8
73.93
71.08
67.8
65.31
62.93
60.01
57.73
52.12
47.81
42.81
37.71
32.71
27.53
22.7
1
Ø 2 ±0.1 0205 SCIF
⌖ 0.2Ⓜ A BⓂ CⓂ 0206 SCIF
Ø 3.5 ±0.1 0207 SCIF
⊥ Ø0.2Ⓜ A 0208 SCIF
B
C6
C6
3X 21.8
LABEL
C7 19.46
2X 21.2
C1 21.8
CENTER PLANE OF DATUM C
1
(2)
(2.5)
(24)
A
0209 SCIF 3.5 ±0.1
0210 SCIF ⌖ 0.2Ⓜ A BⓂ
C
269.3
AREA FOR LABEL ADHESIVE
(29.6)
278 ±0.5

FLEX CABLE REMOVED FOR CLARITY

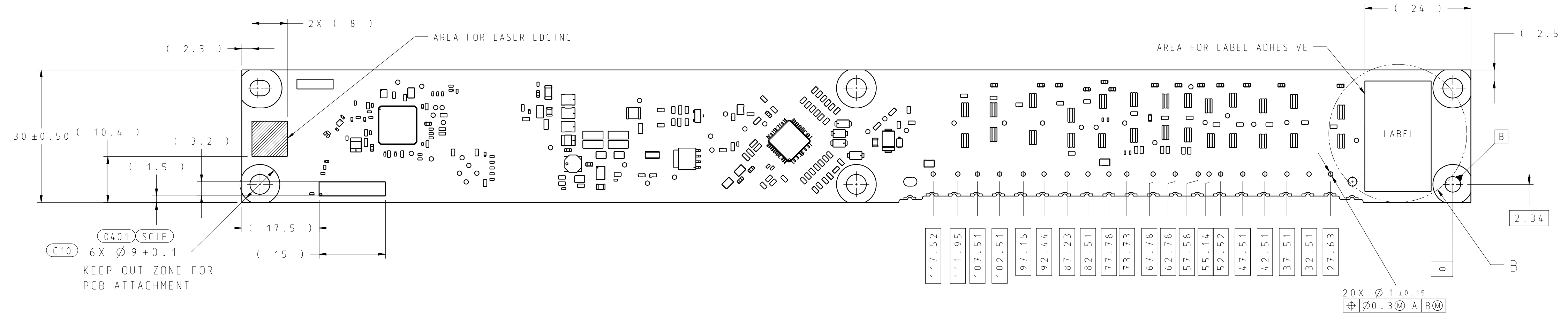
2X (8)
(2.3)
AREA FOR LASER EDGING
30 ±0.50
(10.4)
(3.2)
(1.5)
(17.5)
(15)
0401 SCIF
C10 6X Ø 9 ±0.1
KEEP OUT ZONE FOR PCB ATTACHMENT
(24)
AREA FOR LABEL ADHESIVE
(2.5)
LABEL
B
2.34
117.52
111.95
107.51
102.51
97.15
92.44
87.23
82.51
77.78
73.73
67.78
62.78
57.58
55.14
52.52
47.51
42.51
37.51
32.51
27.63
0
B
20X Ø 1 ±0.15
⌖ Ø0.3Ⓜ A BⓂ

COMPONENT SIDE

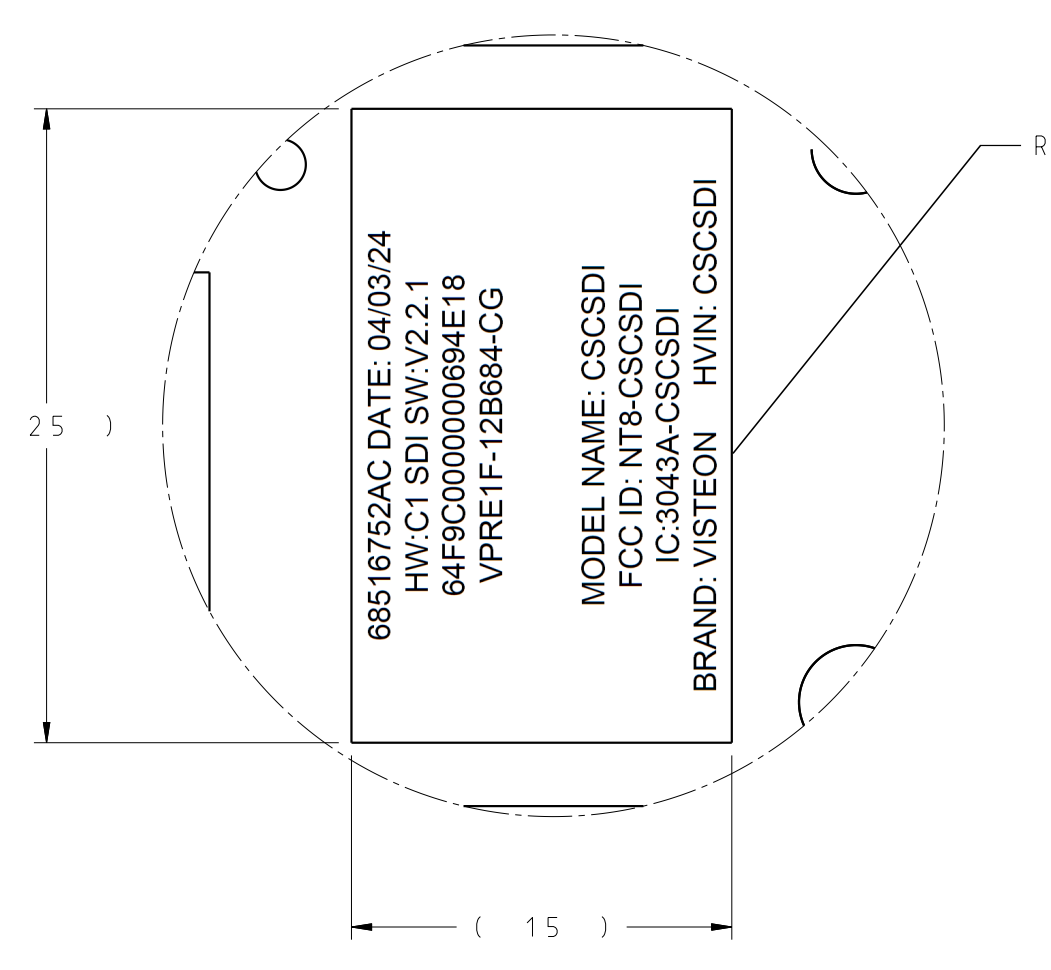
RF CERTIFICATION LABEL
(25)
68516752AC DATE: 04/03/24
HW:C1 SDI SW:V2.2.1
64F9C0000000694E18
VPRE1F-12B684-CG
MODEL NAME: CSCSDI
FCC ID: NT8-CSCSDI
IC:3043A-CSCSDI
BRAND: VISTEON HVIN: CSCSDI
(15)

VIEW IN CIRCLE A
SCALE 4:1

(A1)

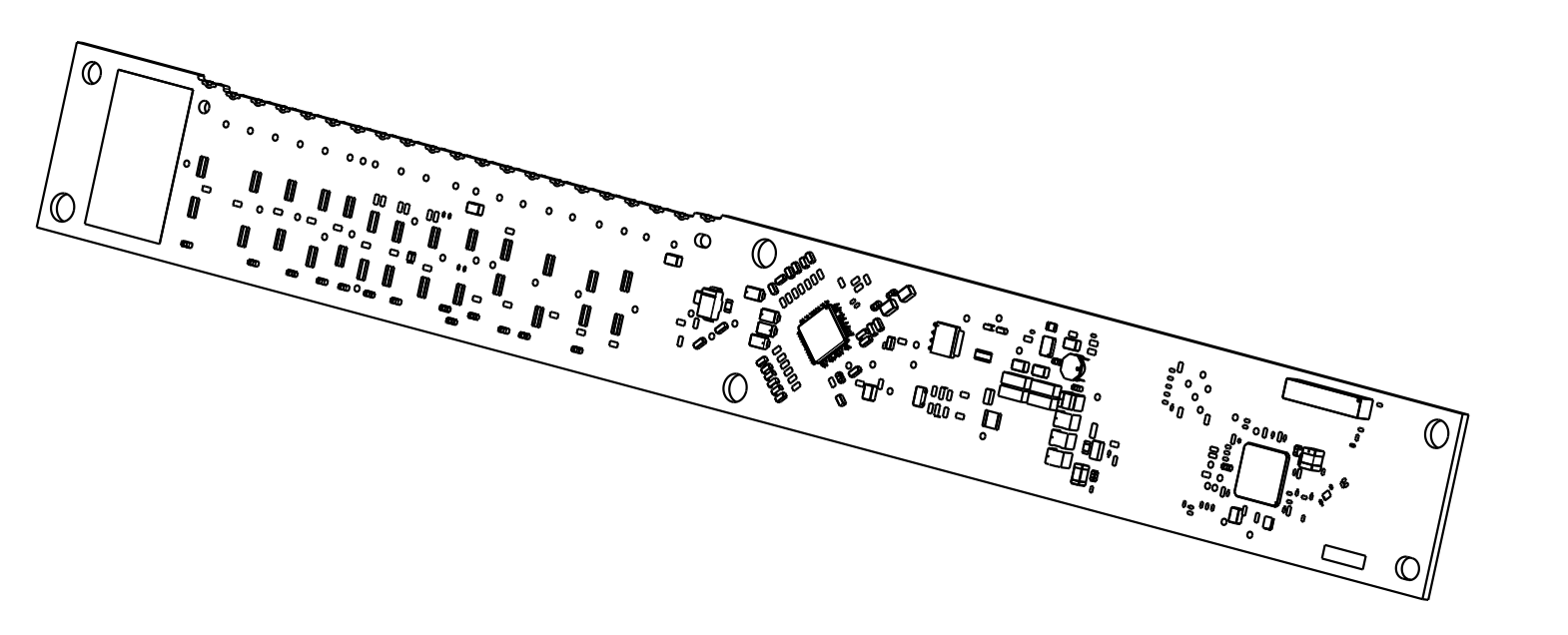

1234567890123456-123456789012-DDMMYY-XXXXX-YYYY
EXAMPLE:
64f9c000005f0e78-5a0b5cb19b73947c-150723-B4SDI-V212
(C5)

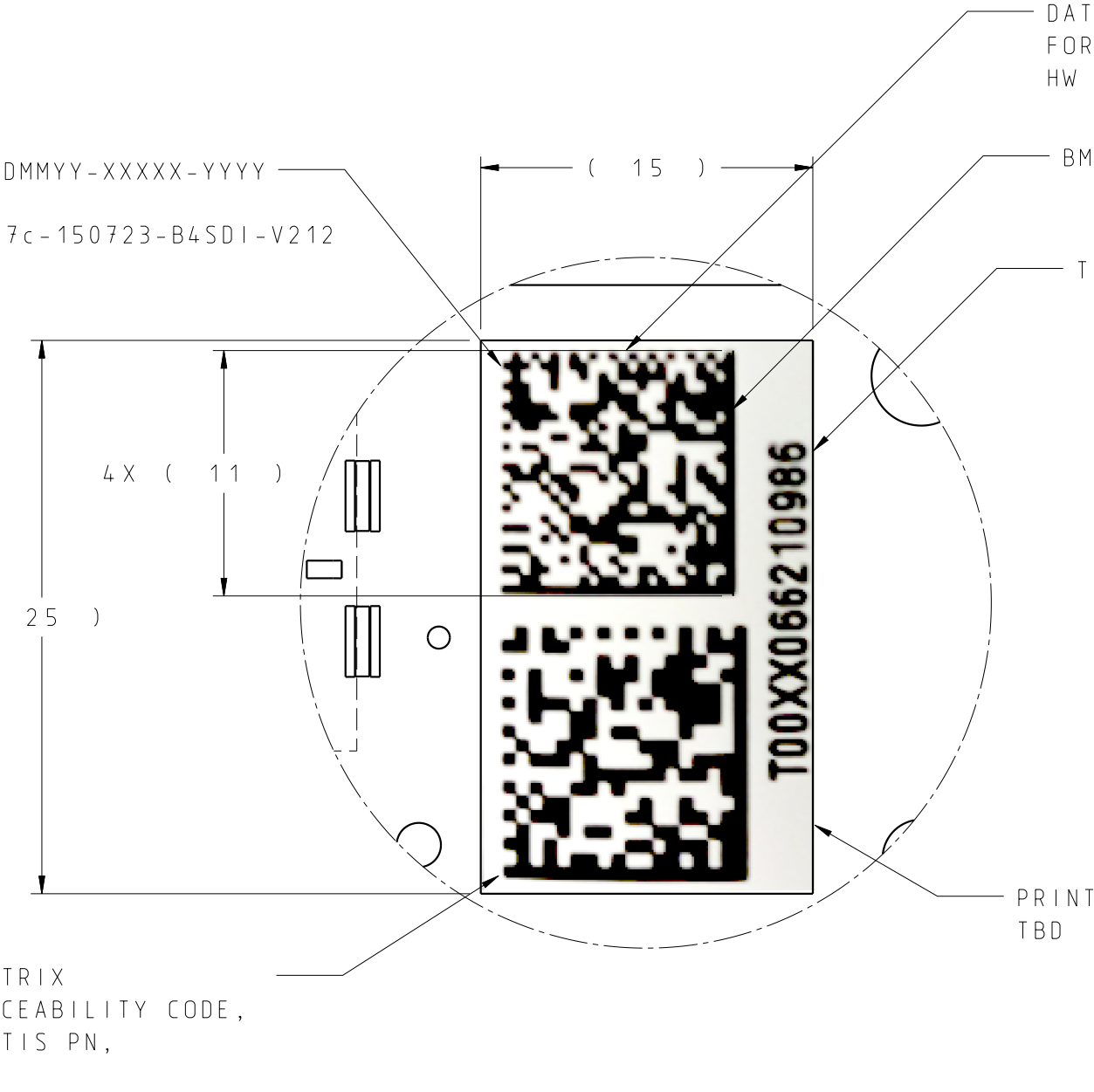
DATA MATRIX FOR MAC ADDRESS, HW AND SW NUMBERS
(15)
BMSIC ID
TRACEABILITY CODE
4X (11)
(25)
T00XX0662109S6
PRINT ON LABEL STOCK TBD
DATA MATRIX FOR TRACEABILITY CODE, STELLANTIS PN, DATE

VIEW IN CIRCLE B
(ACTUAL LABEL SHOWN FOR REFERENCE)
SCALE 4:1

UNLESS OTHERWISE SPECIFIED

⌓ 0.6 A BⓂ CⓂ ALL OVER

VISTEON APPROVAL OF PRODUCTION SAMPLES IS REQUIRED PRIOR TO AUTHORIZATION OF INITIAL PRODUCTION.

VISTEON APPROVAL MUST BE OBTAINED BEFORE ANY CHANGE IN MATERIAL, CONSTRUCTION, PROCESSING OR APPEARANCE CAN BE MADE

CAD FILE DEFINES NOMINAL GEOMETRY. THE ENGINEERING DRAWING DEFINES TOLERANCES OF THE GEOMETRY.

IN THE EVENT OF A CONFLICT BETWEEN THE 3D CAD FILE & ENGINEERING DRAWING FOR NOMINAL GEOMETRY, THE 3D CAD FILE IS MASTER UNLESS THE ENGINEERING DRAWING EXPLICITLY INDICATES THE DRAWING OVERRIDES THE CAD WITH THIS SYMBOL ◑ ADJACENT TO A DIMENSION VALUE.

DIMENSIONING AND TOLERANCING PER ASME Y14.5-2009

FOR PURPOSES OF GEOMETRIC TOLERANCING ALL DIMENSIONAL INFORMATION CONTAINED IN THE CAD MODEL IS BASIC PER ASME Y14.5M-2009 SECTION 1.3.23

DIMENSIONAL MEASUREMENTS TO BE MADE WITH THE MINIMAL AMOUNT OF FORCE NECESSARY TO PREVENT MOVEMENT OF THE PART DURING INSPECTION

TOLERANCES APPLY AFTER ALL PROCESSING OPERATIONS. SUPPLIERS MUST ACCOUNT FOR MATERIAL CONDITION CHANGES FROM ALL PROCESSING OPERATIONS

MANUFACTURER OF THIS PART OR ASSEMBLY TO ENSURE THAT ALL APPLICABLE FUNCTIONAL, APPEARANCE AND LIGHTING REQUIREMENTS ARE MAINTAINED THROUGHOUT PRODUCTION AT THE LEVEL THAT EXISTED WHEN VISTEON APPROVAL WAS GIVEN FOR INITIAL PRODUCTION

RECORD OBLIGATION AND RETENTION TO FOLLOW AS PER IATF 16949

CHANGES AFFECTING DESIGN AND COMPOSITION OR PROCESSING OF THE PART PREVIOUSLY APPROVED FOR PRODUCTION REQUIRE PRIOR APPROVAL FROM VISTEON PRODUCT ENGINEERING. REFER TO IATF 16949

THE MASTER SOURCE OF INFORMATION FOR THIS DRAWING IS IN A PE COMPUTER DATABASE. CHANGES ARE NOT PERMITTED WITHOUT PRIOR CONSENT OF THE RELEVANT ENGINEERING CAD ACTIVITY.

FOR CURRENT RELEASE STATUS SEE THE VISTEON ENGINEERING NOTICE

VISTEON IS NOT LIABLE FOR ANY DAMAGES, COSTS OR EXPENSES RESULTING FROM DEFECTS IN DESIGN OF THE FLEXIBLE PRINTED CIRCUIT (FPC) OR THE INTEGRATION OF THE FPC INTO THE CELL MODULE ASSEMBLY PROVIDED BY THE CELL MODULE SUPPLIER. VISTEON IS ONLY RESPONSIBLE FOR DEFINITION OF THE LASER SOLDERING CONNECTION PAD AND LASER SOLDERING PROCESS.

ELECTRICAL NOTES
- MAX. OPERATING CELL VOLTAGES: 4.5V PER CELL
- MAX OPERATING CELL CURRENTS: 125mA PER CELL
- MAX FPC RESISTANCE: 1 OHM

(B3) 0001 SCIF CONFORMAL COATING
(A4) -MATERIAL: DOWSIL 3-1953
-THICKNESS: 0.127 +/-0.076 mm

VISTEON PROPIETARY SHARED UNDER NDA

(A4) PART MUST CONFORM TO VPRE1F-14A615-RA

(B3) 0002 SCIF MUST COMPLY WITH FMVSS 302

THIS DRAWING HAS BEEN PREPARED BY OR ON BEHALF OF VISTEON CORPORATION. VISTEON RETAINS ALL COMMON LAW, STATUTORY AND OTHER RESERVED RIGHTS, INCLUDING COPYRIGHTS. THIS DRAWING SHALL NOT BE USED FOR ANY PURPOSE OTHER THAN PERFORMING SERVICES DIRECTLY OR INDIRECTLY FOR VISTEON, WITHOUT THE EXPRESSED WRITTEN PERMISSION OF VISTEON. UNAUTHORIZED USE, COPYING OR MODIFICATION, INCLUDING THE REMOVAL OF THIS NOTE, MAY CONSTITUTE A VIOLATION OF CIVIL OR CRIMINAL LAWS ENFORCEABLE BY VISTEON OR GOVERNMENTAL AGENCIES.

COPYRIGHT © VISTEON CORPORATION (2023)

THE MASTER SOURCE OF INFORMATION FOR THIS DRAWING IS IN A PE COMPUTER DATABASE. CHANGES ARE NOT PERMITTED WITHOUT PRIOR CONSENT OF THE RELEVANT ENGINEERING CAD ACTIVITY

LTRS	REVISIONS			
	DATE	ORIGINATOR	REVIEWER	ENGR APP
	RELEASED CN00133293			
	20230720	APIMENTE	ERODRI41	JBRAUTIG
	REMOVED VPRE1F-12B684-CA SUFFIX CB AND CC WERE NOT RELEASED A1 UPDATED DRAWING VIEWS A2 ADDED VIEW IN CIRCLE A3 ADDED VIEW A4 2X UPDATED GENERAL NOTES A5 REMOVED DETAIL VIEW A6 REMOVED VIEW IN CIRCLE A7 REMOVED NOTES RELEASED VPRE1F-12B684-CD CN00134444			
	20231017	APIMENTE	LSALAZA8	PMORENO
	B1 5X CHANGED DIMENSION B2 3X ADDED DIMENSION B3 3X ADDED SCIF B4 UPDATED VIEW CN00134648			
	20231025	APIMENTE	LSALAZA8	PMORENO
	C1 4X ADDED DIMENSION C2 MODIFIED NOMINAL SPRAY LINE C3 ADDED NOTE C4 ADDED BMSIC ID C5 ADDED EXAMPLE C6 3X DELETED DIMENSIONS C7 2X ADDED TEST POINTS DIMENSIONS C8 REMOVED CONFORMAL COATING APPLIED BY KET C9 REMOVED VIEW C10 WAS Ø10 RELEASED VPRE1F-12B684-CE CN00134805			
	20231121	ERODRI41	LSALAZA8	PMORENO

NOT RELEASED
PENDING ON
APPROVALS

THIS DRAWING AND ANY INTELLECTUAL PROPERTY RIGHTS THEREIN ARE PROPERTY OF VISTEON CORPORATION AND NO LICENSES ARE GRANTED UNDER THOSE RIGHTS

DRAFTED IN ACCORDANCE WITH VISTEON ENGINEERING CAD STANDARDS 1.2			MUST COMPLY WITH GADSL, VISTEON AND APPLICABLE OEM RESTRICTED SUBSTANCE MANAGEMENT STANDARDS		
ORIGINATOR APIMENTE	DATE 20230720	REVIEWER ERODRI41	DATE 20230720	ENGINEER JBRAUTIG	DATE 20230720
3RD ANGLE PROJ	CUSTOMER DATA TYPE CATIA V5			SCALE:1:1	UNITS:mm
				SHT 1/1	RH/LH:N/A
	CUSTOMER NUMBER 68516752AC			DWG SIZE:ROLL SIZED	
				D†MC	:IS MASTER

NAME
MOD ASY PWRTRN CONTR INTRFC

CAD FILE	VPRE1F-12B684-C	DATA TYPE CATIA V5R32 FORD
DWG FILE	VPRE1F-12B684-C.DWG	
DATA LOC	TCE	
PRODUCT	BMS	
GBC NUMBER	00375105-05	Visteon
LEGACY NUMBER	VPRE1F-12B684-CE	

68516752AC	8S2P	00375105-05	VPRE1F-12B684-CE
STELLANTIS PART NUMBER	DESCRIPTION	GBC PART NUMBER	VISTEON PART NUMBER