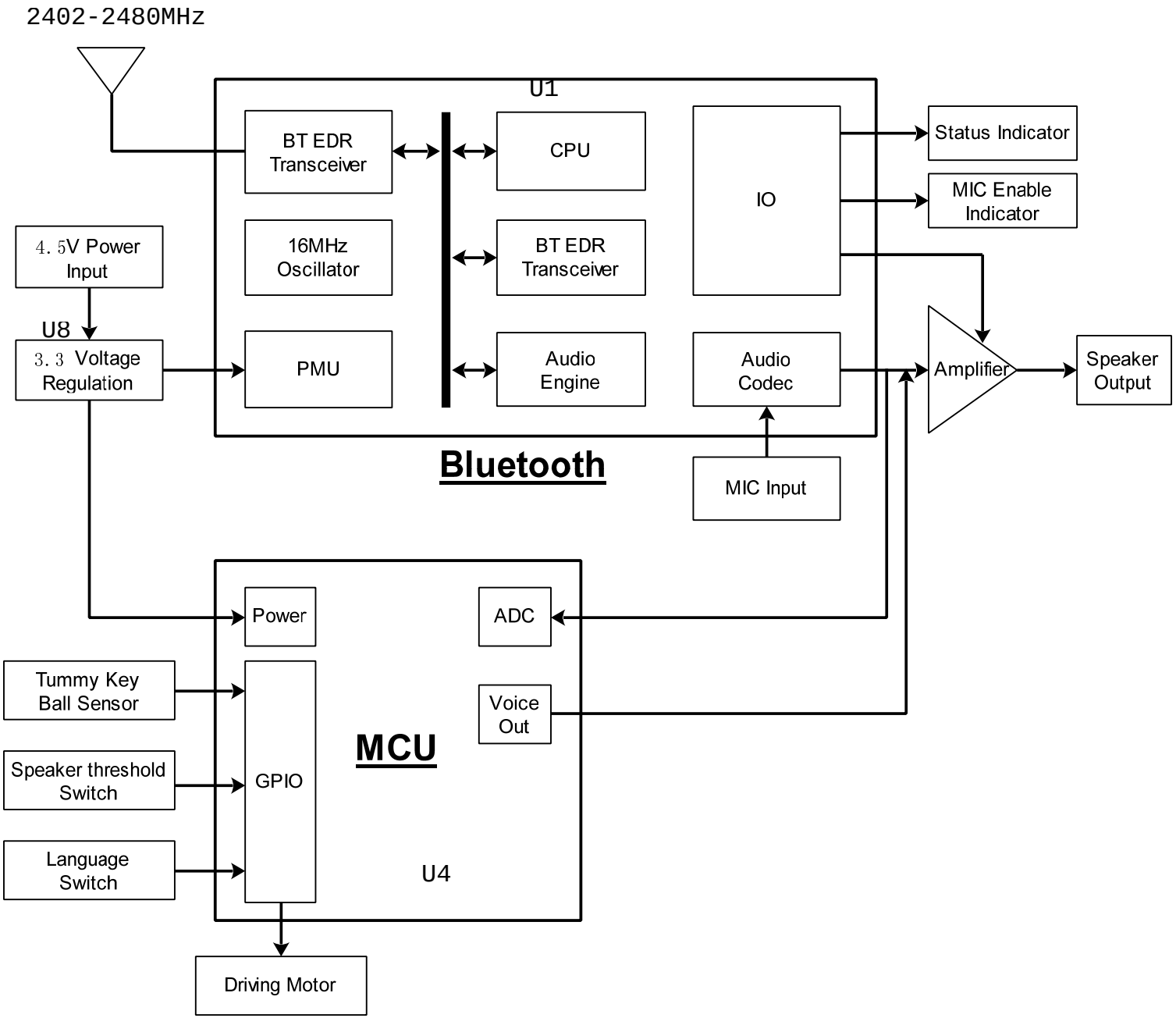Block Diagram of Myfriend Freddy