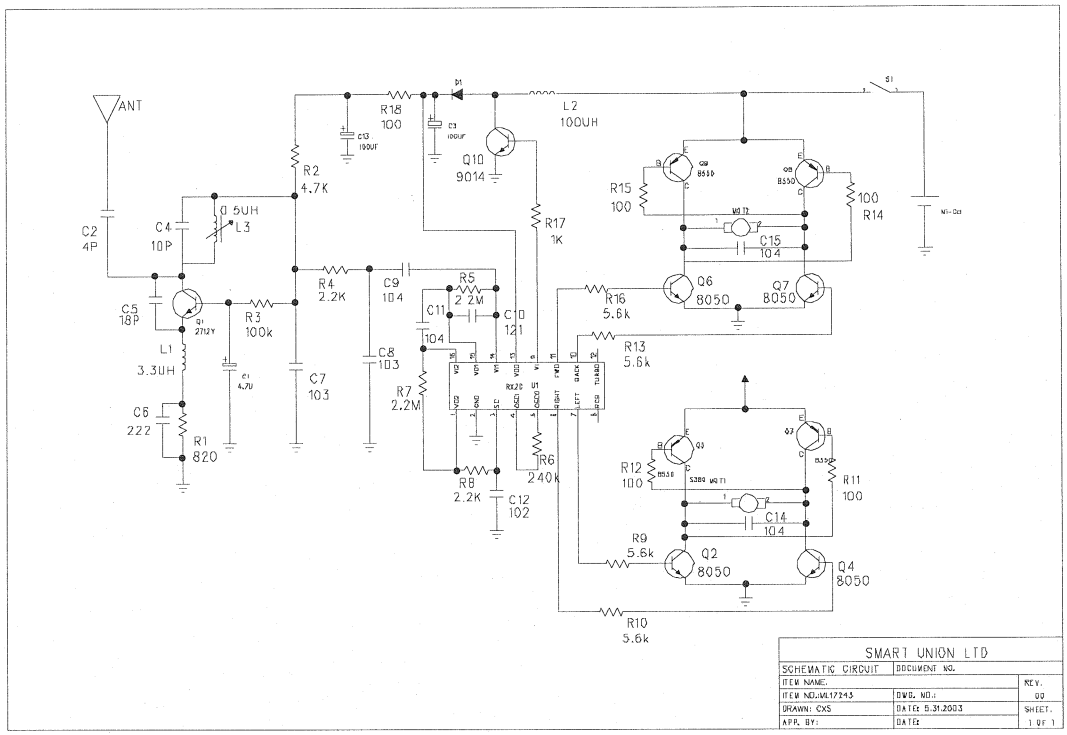
ANT
C2
4P
C4
10P
0.5UH
L3
C5
18P
Q1
2712Y
L1
3.3UH
C6
222
R1
820
R3
100k
C1
4.7U
R2
4.7K
C7
103
R4
2.2K
C9
104
C8
103
R18
100
C13
100UF
D1
C3
100UF
Q10
9014
L2
100UH
R17
1K
R5
2.2M
C11
104
C10
121
R7
2.2M
R8
2.2K
C12
102
R6
240k
U1
R22C
S1
Q9
8550
Q8
8550
R15
100
R14
100
C15
104
Q6
8050
Q7
8050
R16
5.6k
R13
5.6k
Q3
8550
Q1
8550
R12
100
R11
100
C14
104
R9
5.6k
Q2
8050
Q4
8050
R10
5.6k
SMART UNION LTD
SCHEMATIC CIRCUIT
DOCUMENT NO.
ITEM NAME.
REV.
ITEM NO.:WL17245
DWG. NO.:
00
DRAWN: CXS
DATE: 5.31.2003
SHEET.
APP. BY:
DATE:
1 OF 1