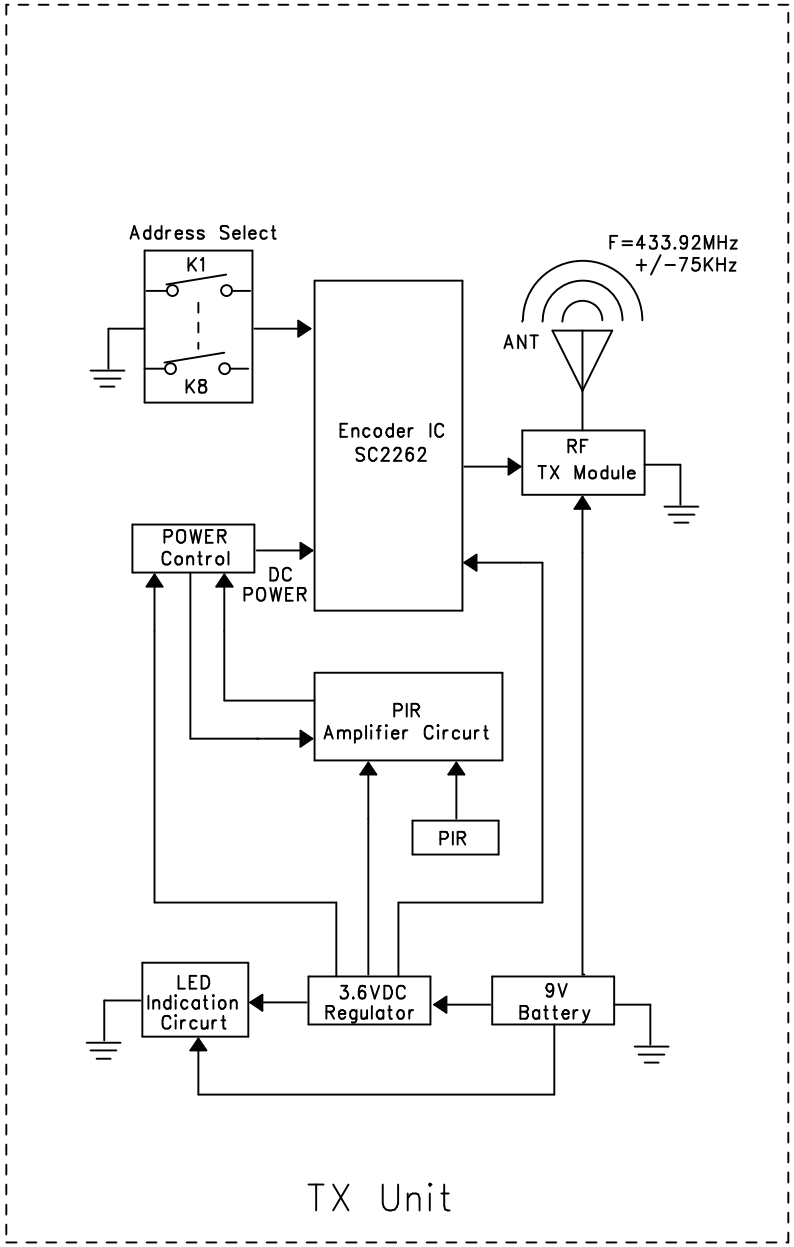

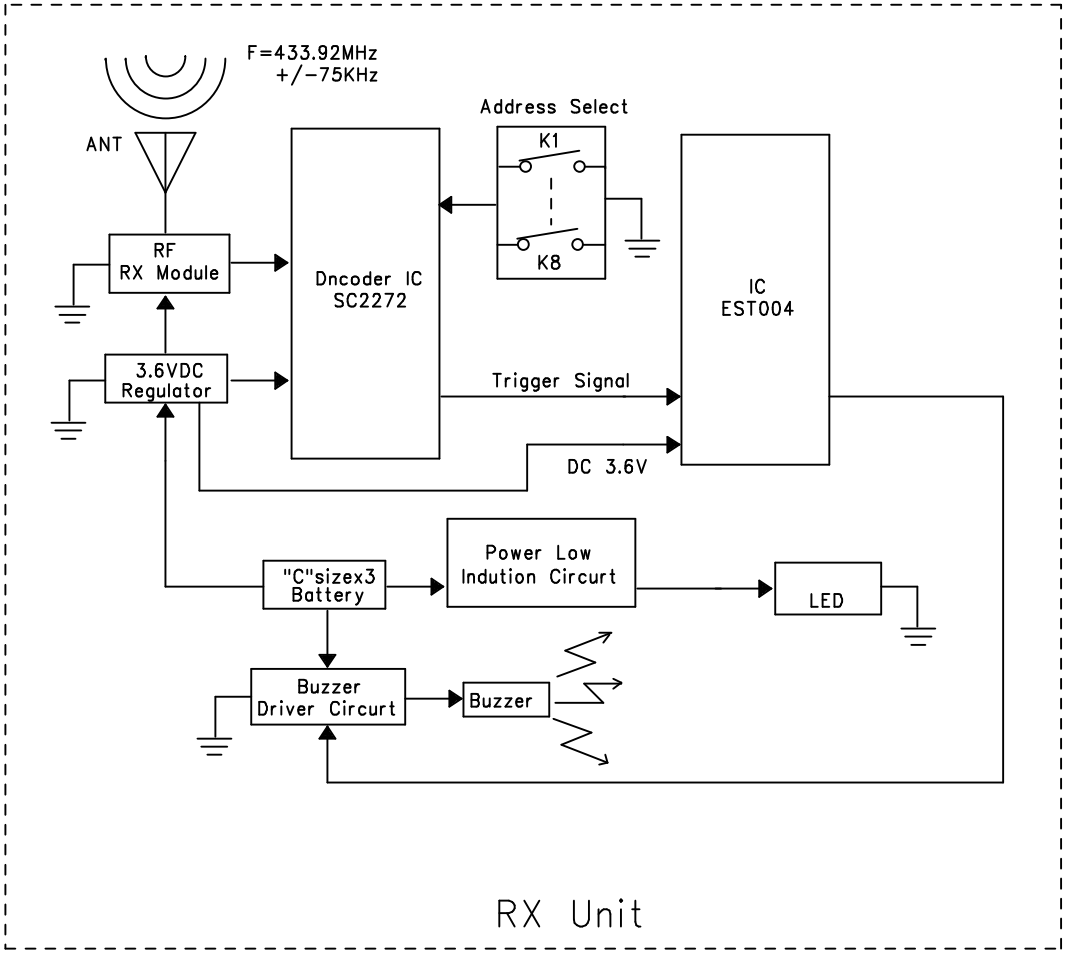

MODE	S615	LELUX ELECTRONICS LTD.	
TITLE	Block Diagram		
	PAGE:	VER NO:	DATE:
	1/1	1.0	05.4.13
APPROVAL BY:	CHECK BY:	DESIGN BY:	DRAW BY: