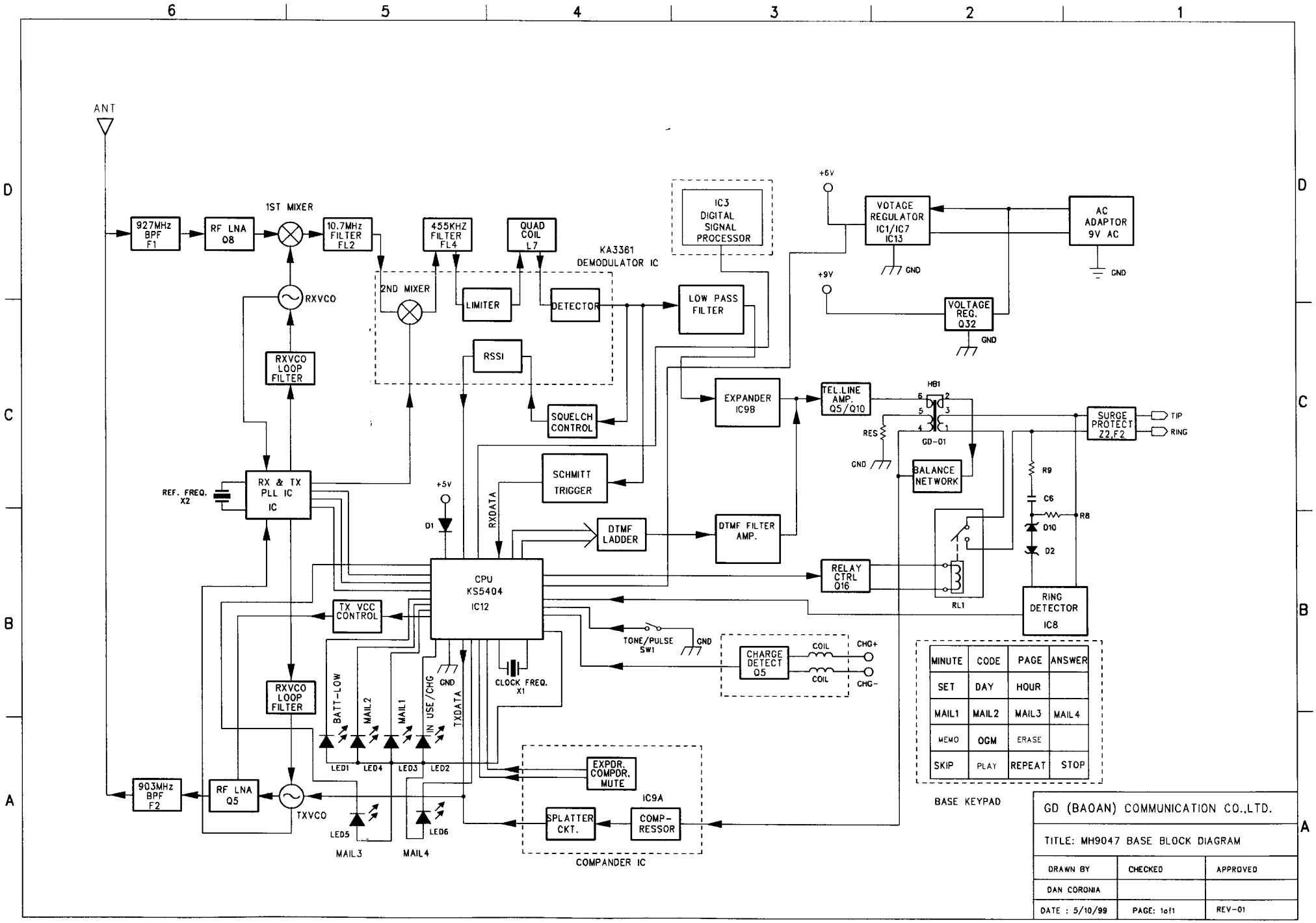


| MINUTE | CODE | PAGE | ANSWER |
|---|---|---|---|
| SET | DAY | HOUR | |
| MAIL1 | MAIL2 | MAIL3 | MAIL4 |
| MEMO | OGM | ERASE | |
| SKIP | PLAY | REPEAT | STOP |

BASE KEYPAD

| | | |
|---|---|---|
| GD (BAOAN) COMMUNICATION CO.,LTD. | | |
| TITLE: MH9047 BASE BLOCK DIAGRAM | | |
| DRAWN BY | CHECKED | APPROVED |
| DAN CORONIA | | |
| DATE : 5/10/99 | PAGE: 1of1 | REV-01 |

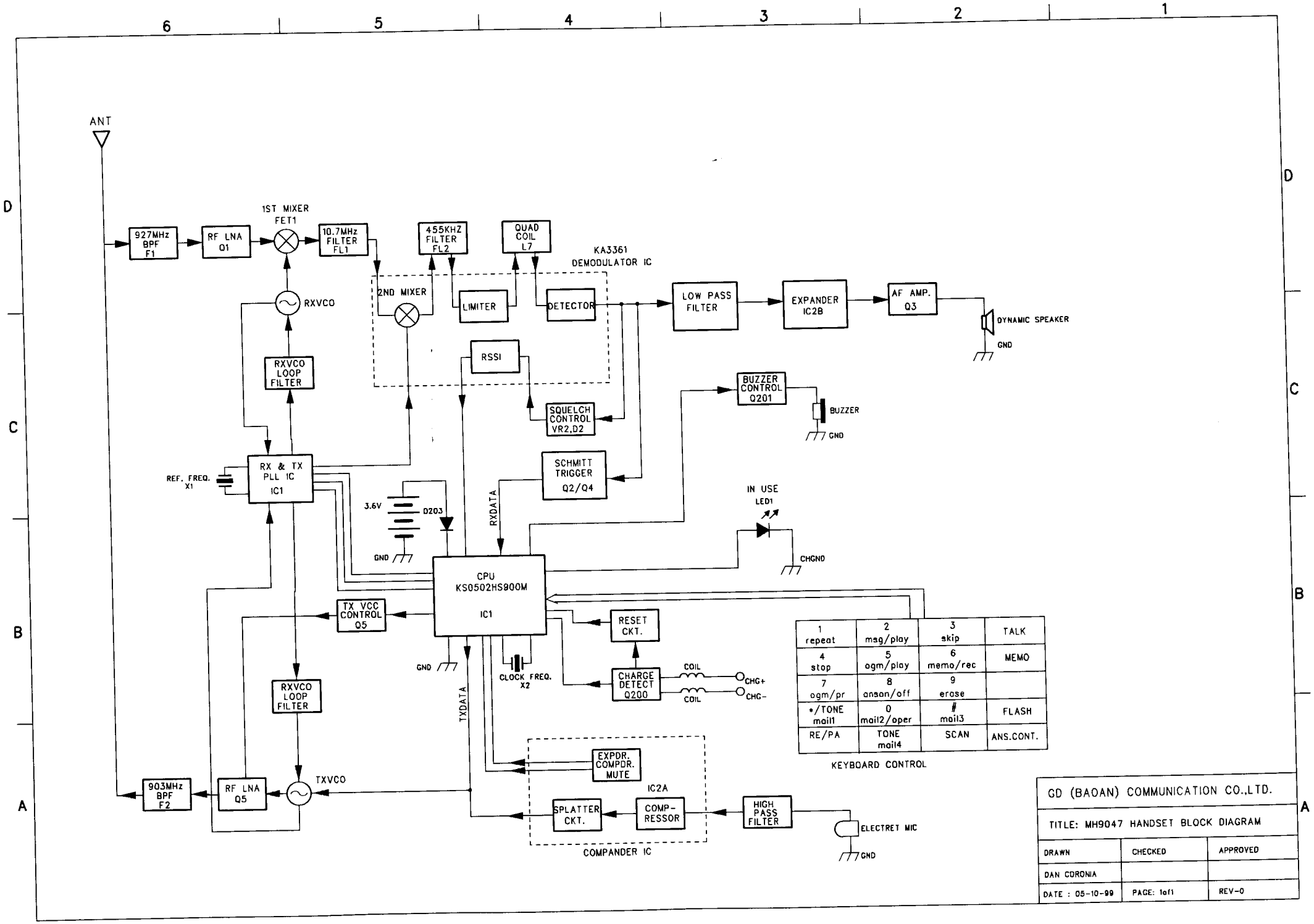
ANT
927MHz BPF F1
RF LNA Q1
1ST MIXER FET1
10.7MHz FILTER FL1
455KHZ FILTER FL2
QUAD COIL L7
KA3361 DEMODULATOR IC
2ND MIXER
LIMITER
DETECTOR
RSSI
LOW PASS FILTER
EXPANDER IC2B
AF AMP. Q3
DYNAMIC SPEAKER
GND
RXVCO
RXVCO LOOP FILTER
SQUELCH CONTROL VR2,D2
BUZZER CONTROL Q201
BUZZER
GND
REF. FREQ. X1
RX & TX PLL IC IC1
SCHMITT TRIGGER Q2/Q4
3.6V
D203
GND
RXDATA
IN USE LED1
CHGND
CPU KS0502HS900M IC1
TX VCC CONTROL Q5
RESET CKT.
GND
CLOCK FREQ. X2
CHARGE DETECT Q200
COIL
COIL
CHG+
CHG-
RXVCO LOOP FILTER
TXDATA
EXPDR. COMPDR. MUTE
IC2A
SPLATTER CKT.
COMP-RESSOR
HIGH PASS FILTER
ELECTRET MIC
GND
COMPANDER IC
903MHz BPF F2
RF LNA Q5
TXVCO
1 repeat | 2 msg/play | 3 skip | TALK
4 stop | 5 ogm/play | 6 memo/rec | MEMO
7 ogm/pr | 8 ansan/off | 9 erase
*/TONE mail1 | 0 mail2/oper | # mail3 | FLASH
RE/PA | TONE mail4 | SCAN | ANS.CONT.
KEYBOARD CONTROL
GD (BAOAN) COMMUNICATION CO.,LTD.
TITLE: MH9047 HANDSET BLOCK DIAGRAM
DRAWN | CHECKED | APPROVED
DAN CORONIA
DATE : 05-10-99 | PAGE: 1of1 | REV-0