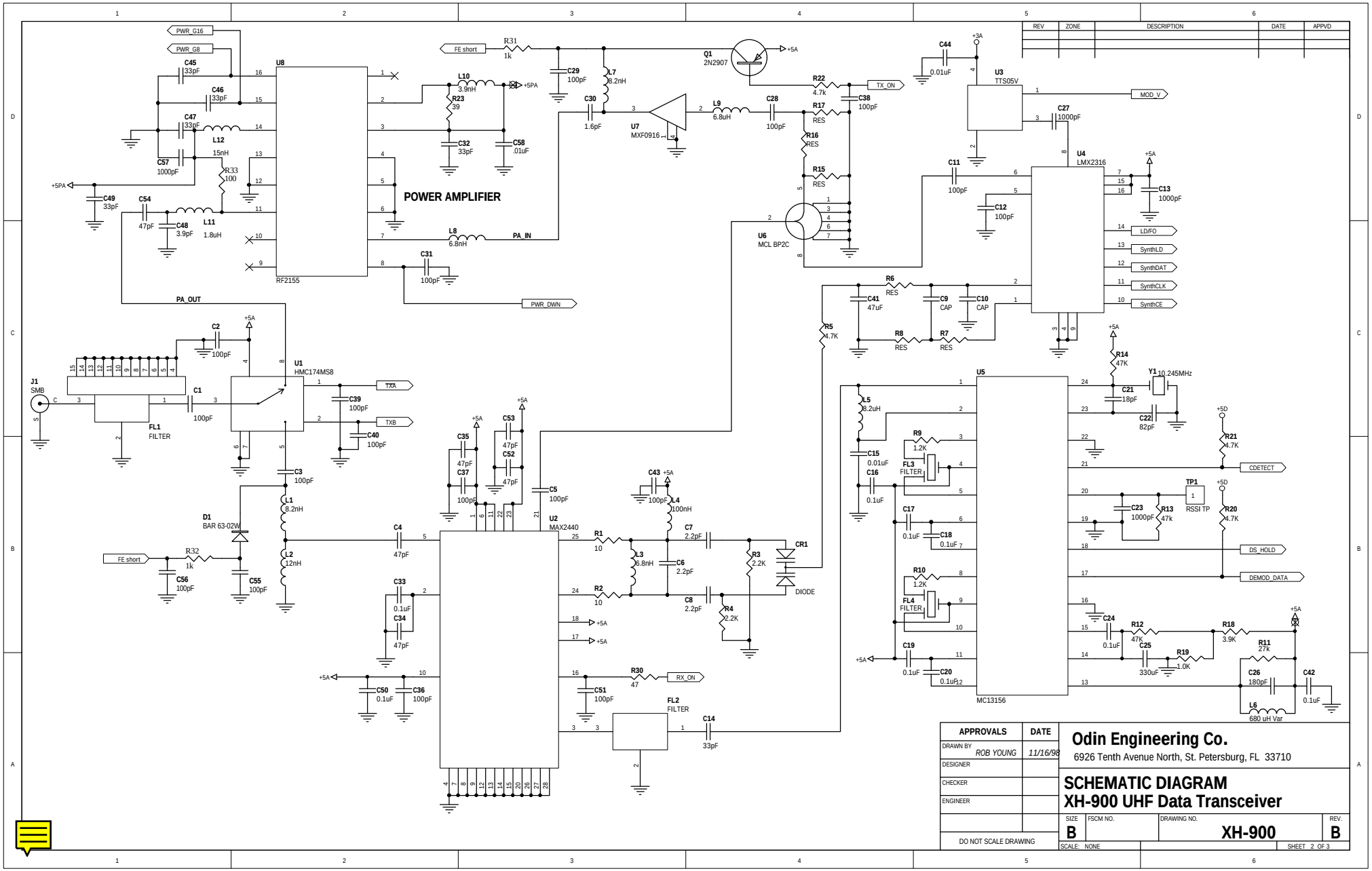
POWER AMPLIFIER
U8
RF2155
U7
MXF0916
Q1
2N2907
U6
MCL BP2C
U3
TTS05V
U4
LMX2316
U1
HMC174MS8
U2
MAX2440
U5
MC13156
J1
SMB
FL1
FILTER
FL2
FILTER
FL3
FILTER
FL4
FILTER
D1
BAR 63-02W
CR1
DIODE
Y1
10.245MHz
TP1
RSSI TP
PWR_G16
PWR_G8
FE short
PA_IN
PA_OUT
PWR_DWN
TX_ON
RX_ON
MOD_V
LD/FO
SynthLD
SynthDAT
SynthCLK
SynthCE
TXA
TXB
CDETECT
DS_HOLD
DEMOD_DATA
+5A
+5PA
+3A
+5D
L8 6.8nH
L9 6.8uH
L11 1.8uH
L12 15nH
L10 3.9nH
L7 8.2nH
L1 8.2nH
L2 12nH
L3 6.8nH
L4 100nH
L5 8.2uH
L6 680 uH Var
R31 1k
R32 1k
R33 100
R23 39
R22 4.7k
R17 RES
R16 RES
R15 RES
R6 RES
R8 RES
R7 RES
R5 4.7K
R14 47K
R21 4.7K
R20 4.7K
R13 47k
R1 10
R2 10
R3 2.2K
R4 2.2K
R9 1.2K
R10 1.2K
R12 47K
R18 3.9K
R11 27k
R19 1.0K
R30 47
C14 33pF
C7 2.2pF
C6 2.2pF
C8 2.2pF
C22 82pF
C21 18pF
C26 180pF
C42 0.1uF
C25 330uF
C23 1000pF
C13 1000pF
C27 1000pF
C44 0.01uF
C38 100pF
C29 100pF
C30 1.6pF
C28 100pF
C11 100pF
C12 100pF
C41 47uF
C9 CAP
C10 CAP
C31 100pF
C39 100pF
C40 100pF
C1 100pF
C2 100pF
C3 100pF
C4 47pF
C5 100pF
C36 100pF
C50 0.1uF
C51 100pF
C33 0.1uF
C34 47pF
C35 47pF
C37 100pF
C53 47pF
C52 47pF
C43 100pF
C15 0.01uF
C16 0.1uF
C17 0.1uF
C18 0.1uF
C19 0.1uF
C20 0.1uF
C24 0.1uF
C45 33pF
C46 33pF
C47 33pF
C57 1000pF
C49 33pF
C54 47pF
C48 3.9pF
C32 33pF
C58 .01uF
C56 100pF
C55 100pF
REV
ZONE
DESCRIPTION
DATE
APPVD
APPROVALS
DATE
DRAWN BY
ROB YOUNG
11/16/98
DESIGNER
CHECKER
ENGINEER
DO NOT SCALE DRAWING
Odin Engineering Co.
6926 Tenth Avenue North, St. Petersburg, FL 33710
SCHEMATIC DIAGRAM
XH-900 UHF Data Transceiver
SIZE
B
FSCM NO.
DRAWING NO.
XH-900
REV.
B
SCALE: NONE
SHEET 2 OF 3