REV	ZONE	DESCRIPTION	DATE	APPVD

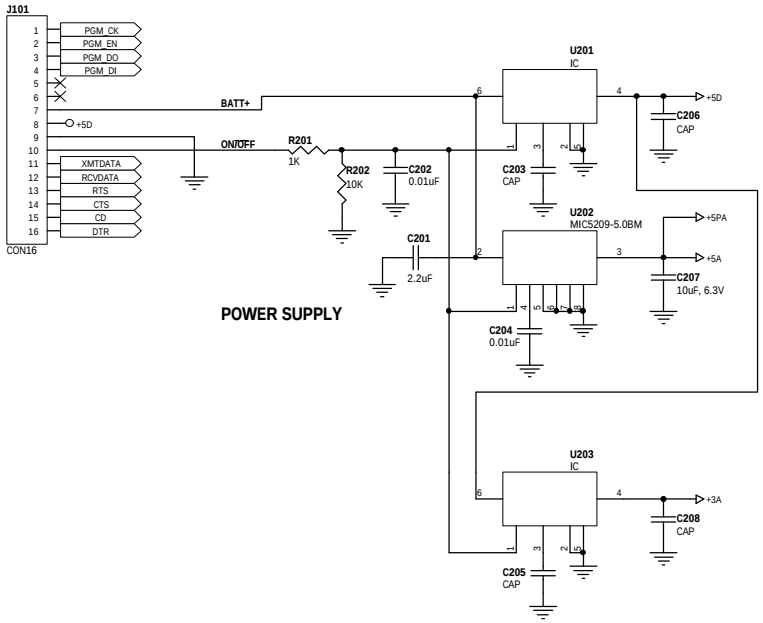

POWER SUPPLY

APPROVALS	DATE
DRAWN BY ROB YOUNG	11/16/98
DESIGNER	
CHECKER	
ENGINEER	
DO NOT SCALE DRAWING	

Odin Engineering Co.
6926 Tenth Avenue North, St. Petersburg, FL 33710

SCHEMATIC DIAGRAM
XC-900 UHF Data Transceiver

SIZE	FSCM NO.	DRAWING NO.	REV.
B		XH-900	C

SCALE: NONE

SHEET 3 OF 3