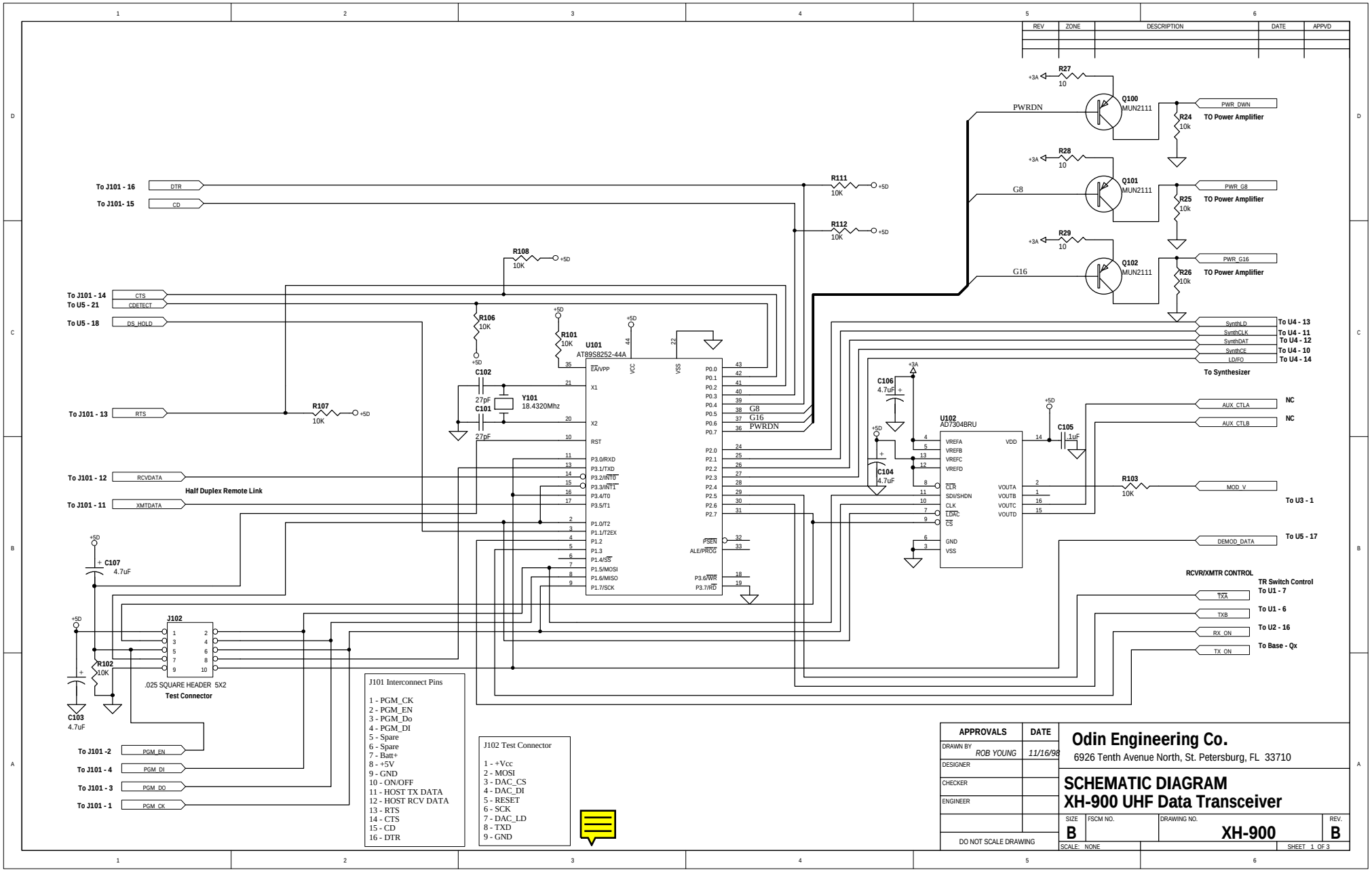
REV
ZONE
DESCRIPTION
DATE
APPVD
R27
10
Q100
MUN2111
PWRDN
R24
10k
PWR_DWN
TO Power Amplifier
R28
10
Q101
MUN2111
G8
R25
10k
PWR_G8
TO Power Amplifier
R29
10
Q102
MUN2111
G16
R26
10k
PWR_G16
TO Power Amplifier
To J101 - 16
DTR
To J101- 15
CD
R111
10K
R112
10K
R108
10K
To J101 - 14
CTS
To U5 - 21
CDETECT
To U5 - 18
DS_HOLD
R106
10K
R101
10K
U101
AT89S8252-44A
C102
27pF
C101
27pF
Y101
18.4320Mhz
To J101 - 13
RTS
R107
10K
To J101 - 12
RCVDATA
Half Duplex Remote Link
To J101 - 11
XMTDATA
C107
4.7uF
J102
R102
10K
.025 SQUARE HEADER 5X2
Test Connector
C103
4.7uF
To J101 -2
PGM_EN
To J101 - 4
PGM_DI
To J101 - 3
PGM_DO
To J101 - 1
PGM_CK
J101 Interconnect Pins
1 - PGM_CK
2 - PGM_EN
3 - PGM_Do
4 - PGM_DI
5 - Spare
6 - Spare
7 - Batt+
8 - +5V
9 - GND
10 - ON/OFF
11 - HOST TX DATA
12 - HOST RCV DATA
13 - RTS
14 - CTS
15 - CD
16 - DTR
J102 Test Connector
1 - +Vcc
2 - MOSI
3 - DAC_CS
4 - DAC_DI
5 - RESET
6 - SCK
7 - DAC_LD
8 - TXD
9 - GND
C106
4.7uF
C104
4.7uF
U102
AD7304BRU
C105
.1uF
R103
10K
AUX_CTLA
NC
AUX_CTLB
NC
MOD_V
To U3 - 1
DEMOD_DATA
To U5 - 17
SynthLD
To U4 - 13
SynthCLK
To U4 - 11
SynthDAT
To U4 - 12
SynthCE
To U4 - 10
LD/FO
To U4 - 14
To Synthesizer
RCVR/XMTR CONTROL
TR Switch Control
TXA
To U1 - 7
TXB
To U1 - 6
RX_ON
To U2 - 16
TX_ON
To Base - Qx
APPROVALS
DATE
DRAWN BY
ROB YOUNG
11/16/98
DESIGNER
CHECKER
ENGINEER
DO NOT SCALE DRAWING
Odin Engineering Co.
6926 Tenth Avenue North, St. Petersburg, FL 33710
SCHEMATIC DIAGRAM
XH-900 UHF Data Transceiver
SIZE
B
FSCM NO.
DRAWING NO.
XH-900
REV.
B
SCALE: NONE
SHEET 1 OF 3