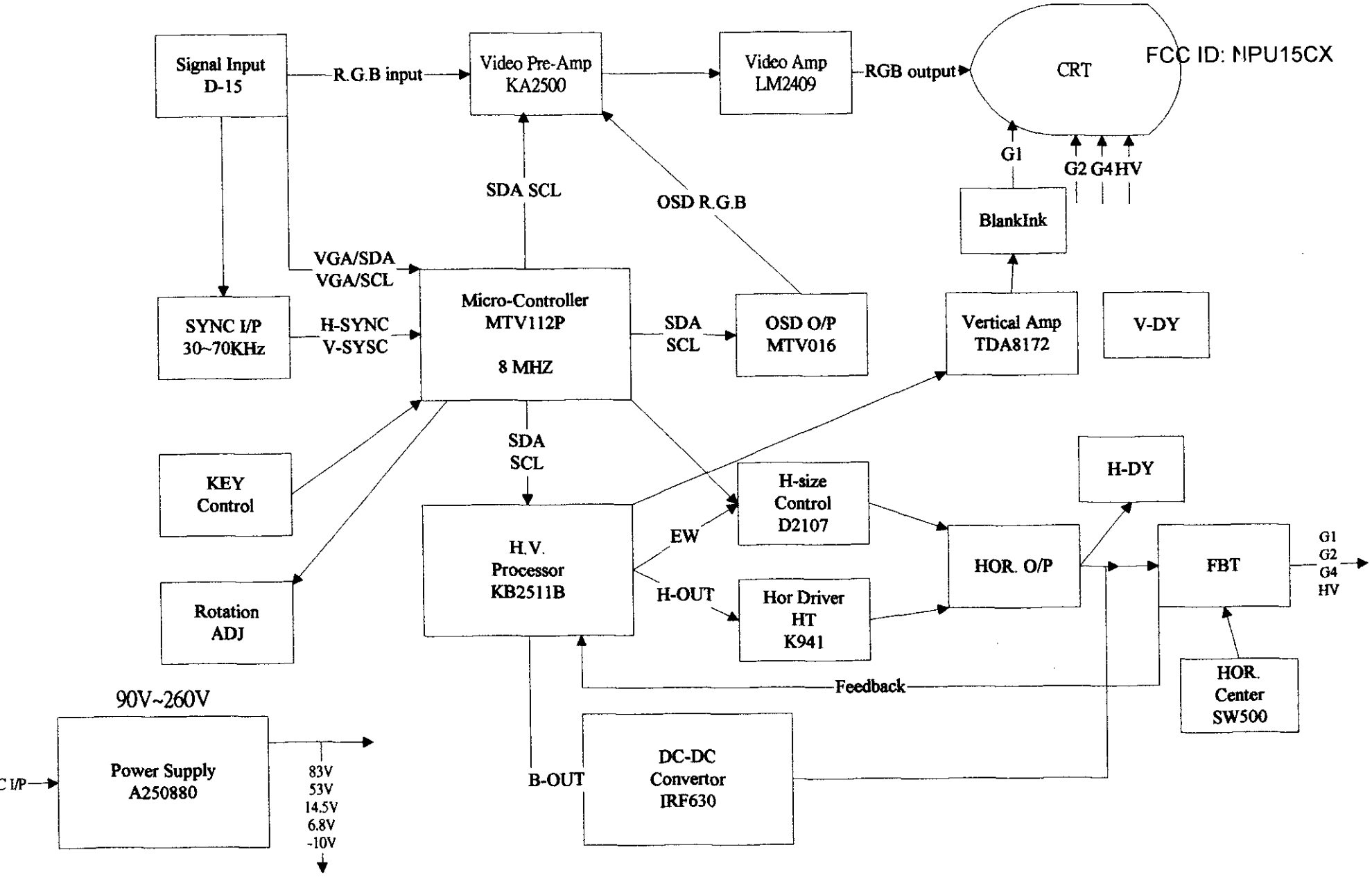15CX Block Diagram