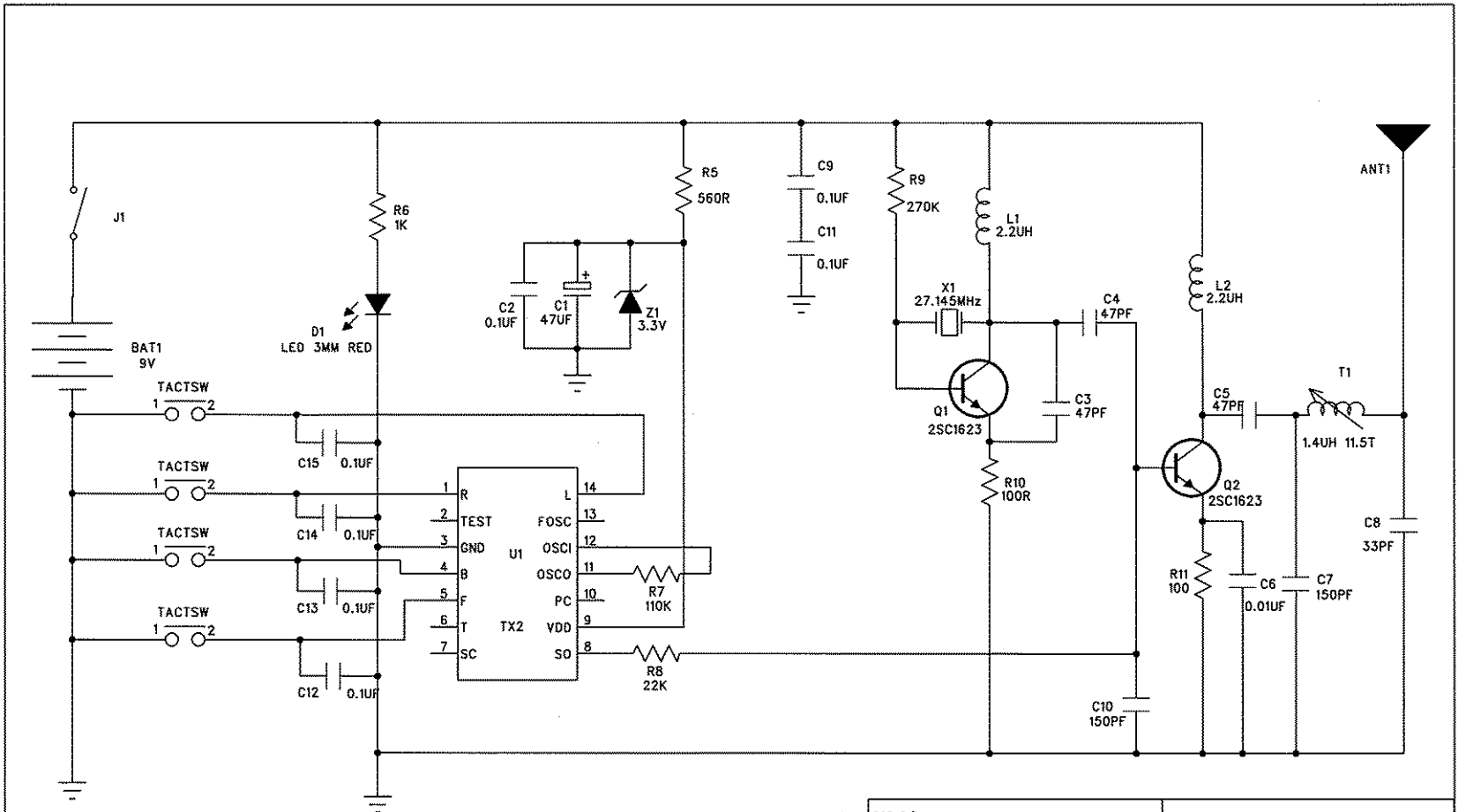


| | | |
|---|---|---|
| COB P/N: | | KIN YAT Industrial Co.LTD |
| MODEL: | RC40 | |
| MODEL NO: | SKU-8676 | |
| PCB NO: | 80ZTX147R3-FR4-1 | Description: RC40-TX-27M |
| PCBA NO: | TX-147-40 | |
| DICE NO: | | Page: 1 of 1 Rev: |
| Drawn by: | | Issued date: 2005-12-13 |