FCC ID: NO9MEC004

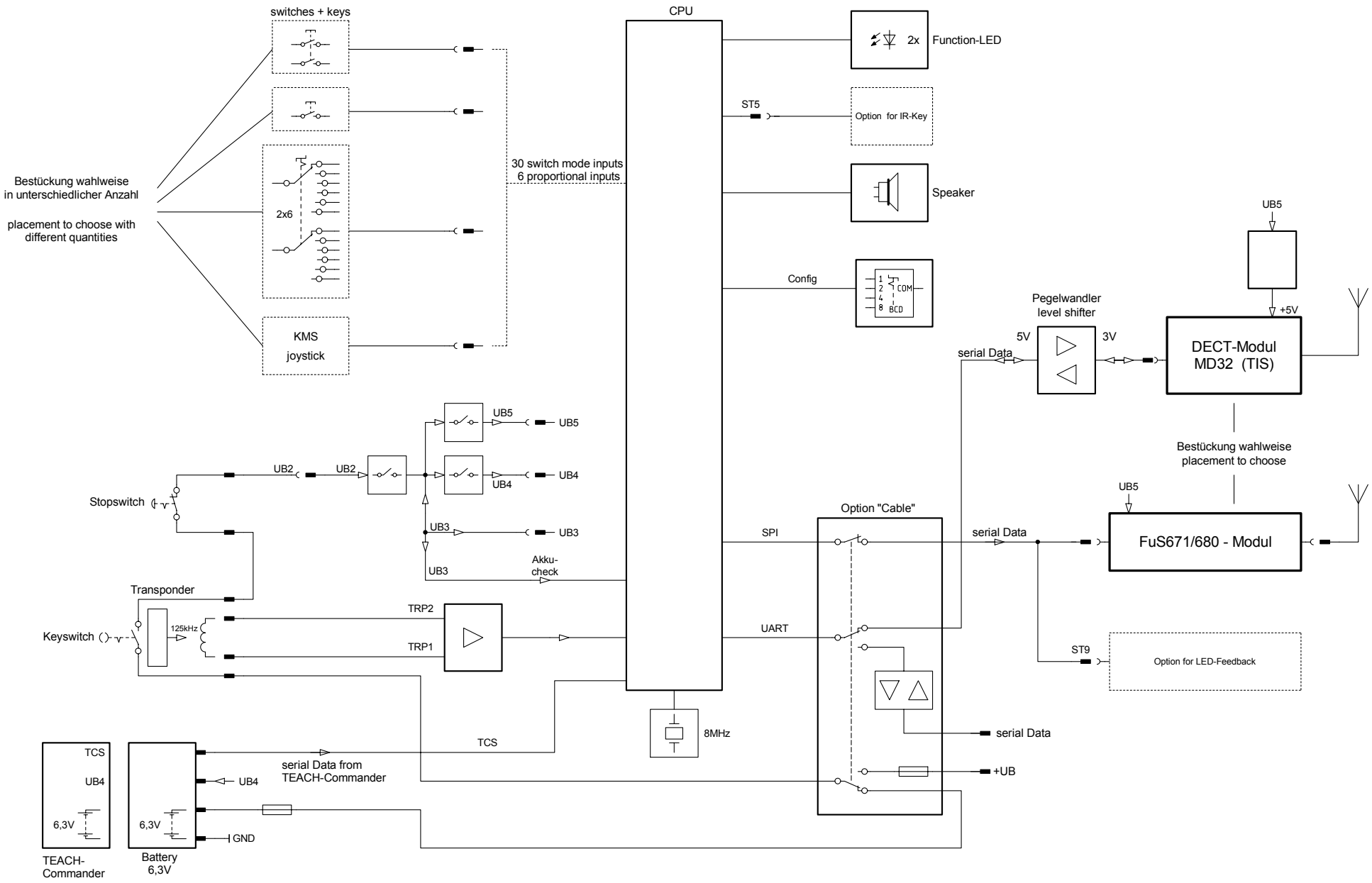

HBC-radiomatic GmbH Postfach 15 61 D-74555 Crailsheim	Sender "eco" + "spectrum 1" (MEC) Blockschaltbild / block diagram	Designed by / checked by: M.Metzger / T.Renner Date: 13.02.2003 File: 11046c_95_MEC.pdf Doc.No.: 11.046.C.95 Sheet 01 of 01