Block diagram
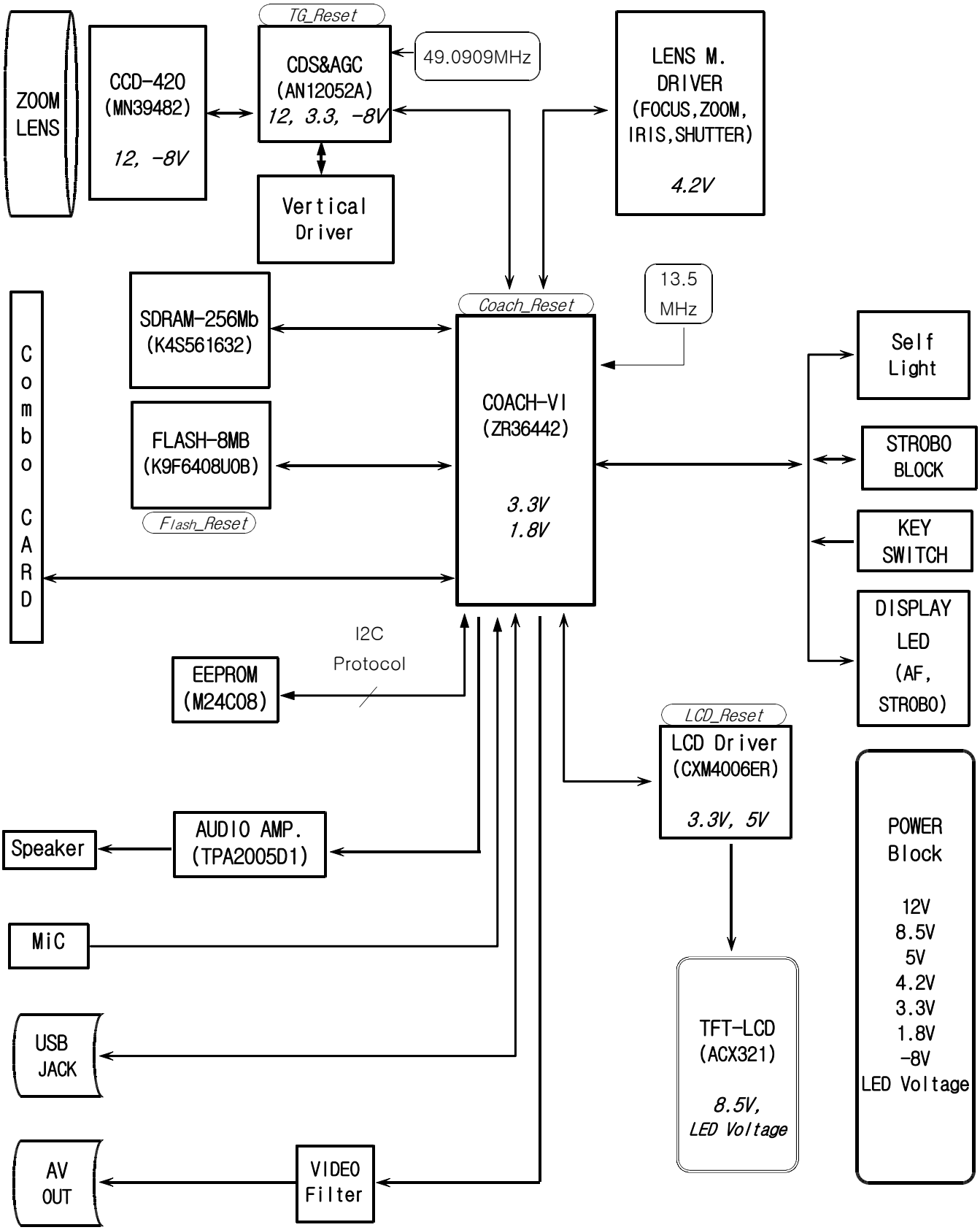
2004.01.02