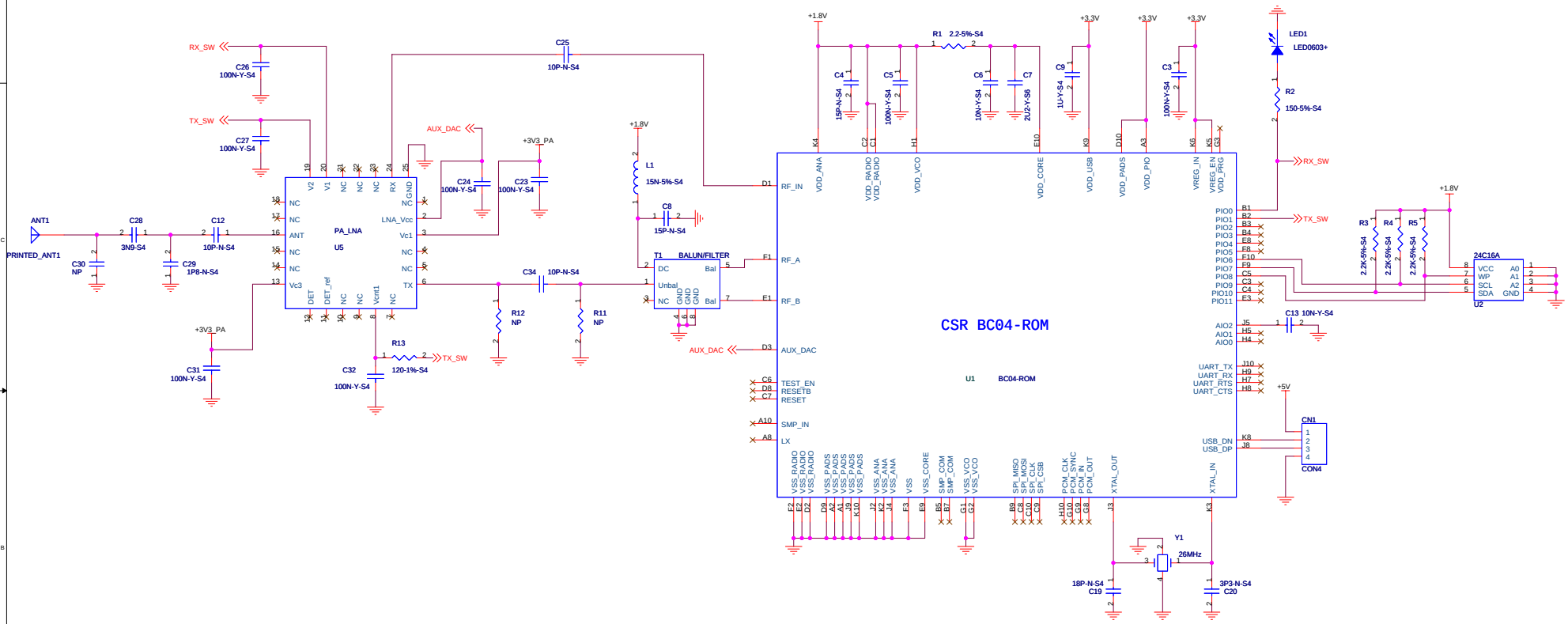

Billionton Systems Inc.		
Title: BC04-ROM Class2 Dongle		
Size: C	Document Number	Rev: 1.0
Date:	Sheet 1 of 1	