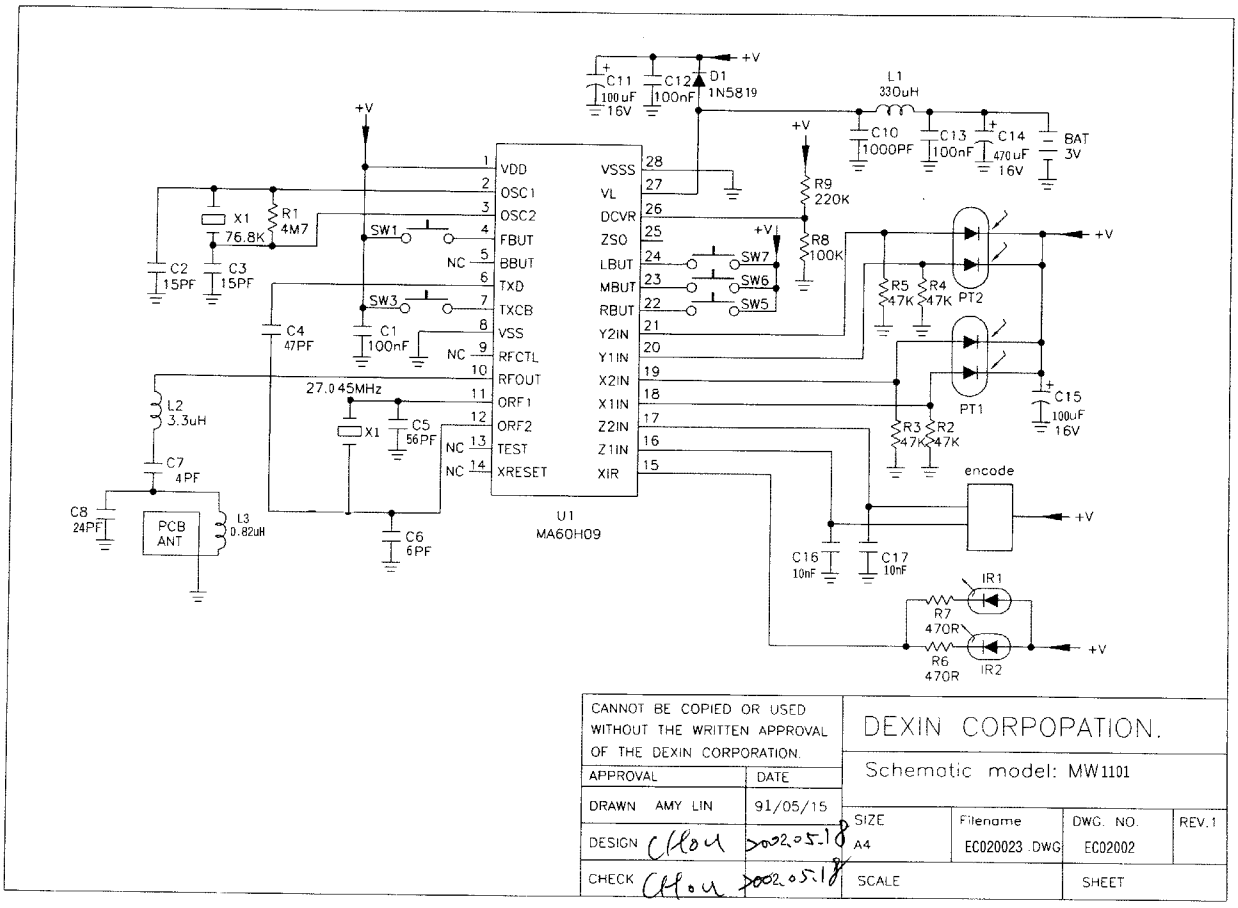


| | | | | |
|---|---|---|---|---|
| CANNOT BE COPIED OR USED WITHOUT THE WRITTEN APPROVAL OF THE DEXIN CORPORATION. | | DEXIN CORPOPATION. | | |
| APPROVAL | DATE | Schematic model: MW1101 | | |
| DRAWN AMY LIN | 91/05/15 | SIZE A4 | Filename EC020023 .DWG | DWG. NO. EC02002 | REV.1 |
| DESIGN Chou | 2002.05.18 | | | |
| CHECK Chou | 2002.05.18 | SCALE | | SHEET |