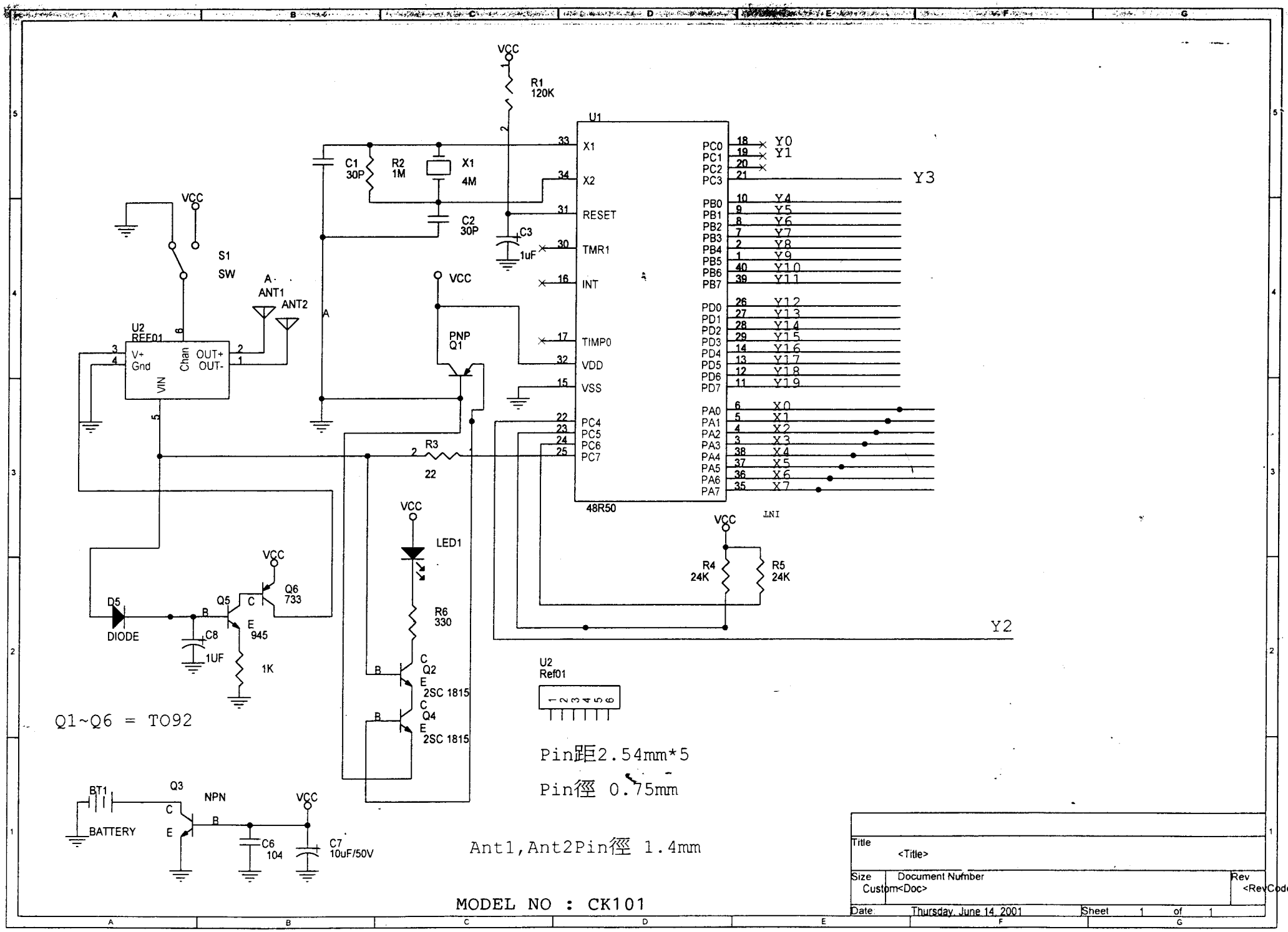
VCC
R1
120K
U1
X1
X2
RESET
TMR1
INT
TIMP0
VDD
VSS
PC4
PC5
PC6
PC7
PC0
PC1
PC2
PC3
PB0
PB1
PB2
PB3
PB4
PB5
PB6
PB7
PD0
PD1
PD2
PD3
PD4
PD5
PD6
PD7
PA0
PA1
PA2
PA3
PA4
PA5
PA6
PA7
48R50
C1
30P
R2
1M
X1
4M
C2
30P
C3
1uF
S1
SW
A
ANT1
ANT2
U2
REF01
V+
Gnd
Chan
OUT+
OUT-
VIN
PNP
Q1
R3
22
LED1
R6
330
Q2
2SC 1815
Q4
2SC 1815
R4
24K
R5
24K
D5
DIODE
Q5
945
Q6
733
C8
1UF
1K
U2
Ref01
Q1~Q6 = TO92
Pin距2.54mm*5
Pin徑 0.75mm
BT1
BATTERY
Q3
NPN
C6
104
C7
10uF/50V
Ant1,Ant2Pin徑 1.4mm
MODEL NO : CK101
Y0
Y1
Y3
Y4
Y5
Y6
Y7
Y8
Y9
Y10
Y11
Y12
Y13
Y14
Y15
Y16
Y17
Y18
Y19
X0
X1
X2
X3
X4
X5
X6
X7
Y2
Title
<Title>
Size
Custom
Document Number
<Doc>
Rev
<RevCode>
Date
Thursday, June 14, 2001
Sheet
1
of
1