AWX701TX IR TO RF

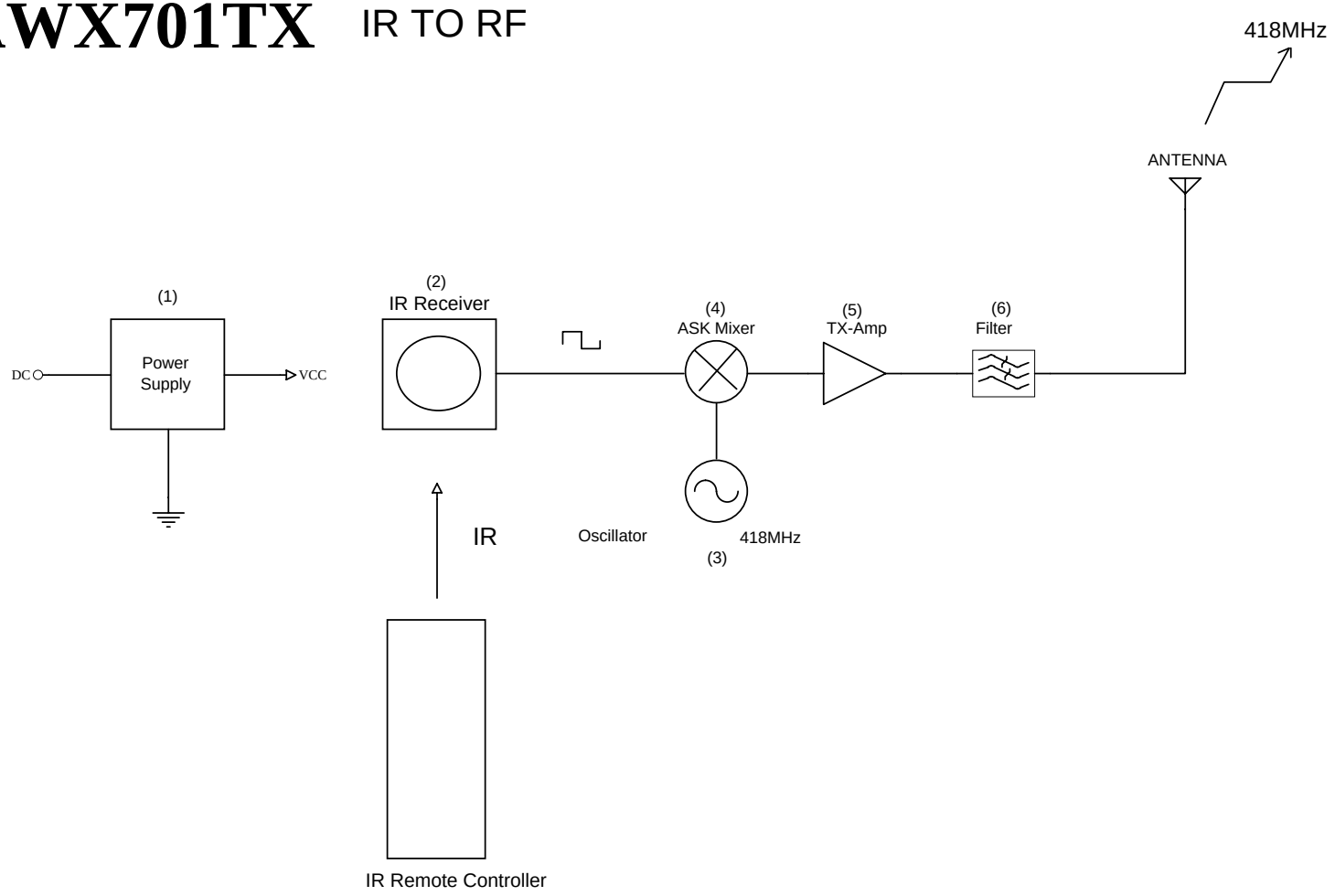

REV.	ECN NO.	DESCRIPTION	DATE	ENGINEER

REVISIONS

Error : Awlogo.bmp file not found.

大紘科技股份有限公司

AIRWAVE TECHNOLOGIES INC.

DRAW BY	*L.H.S*	SIZE	DWG TITLE (433.92 MHz) ***AWX701TX BLOCK Diagram***	REV. A
ENG. BY	*L.H.S*			PAGE 1 of 1
ISSUED BY			DWG NO.	