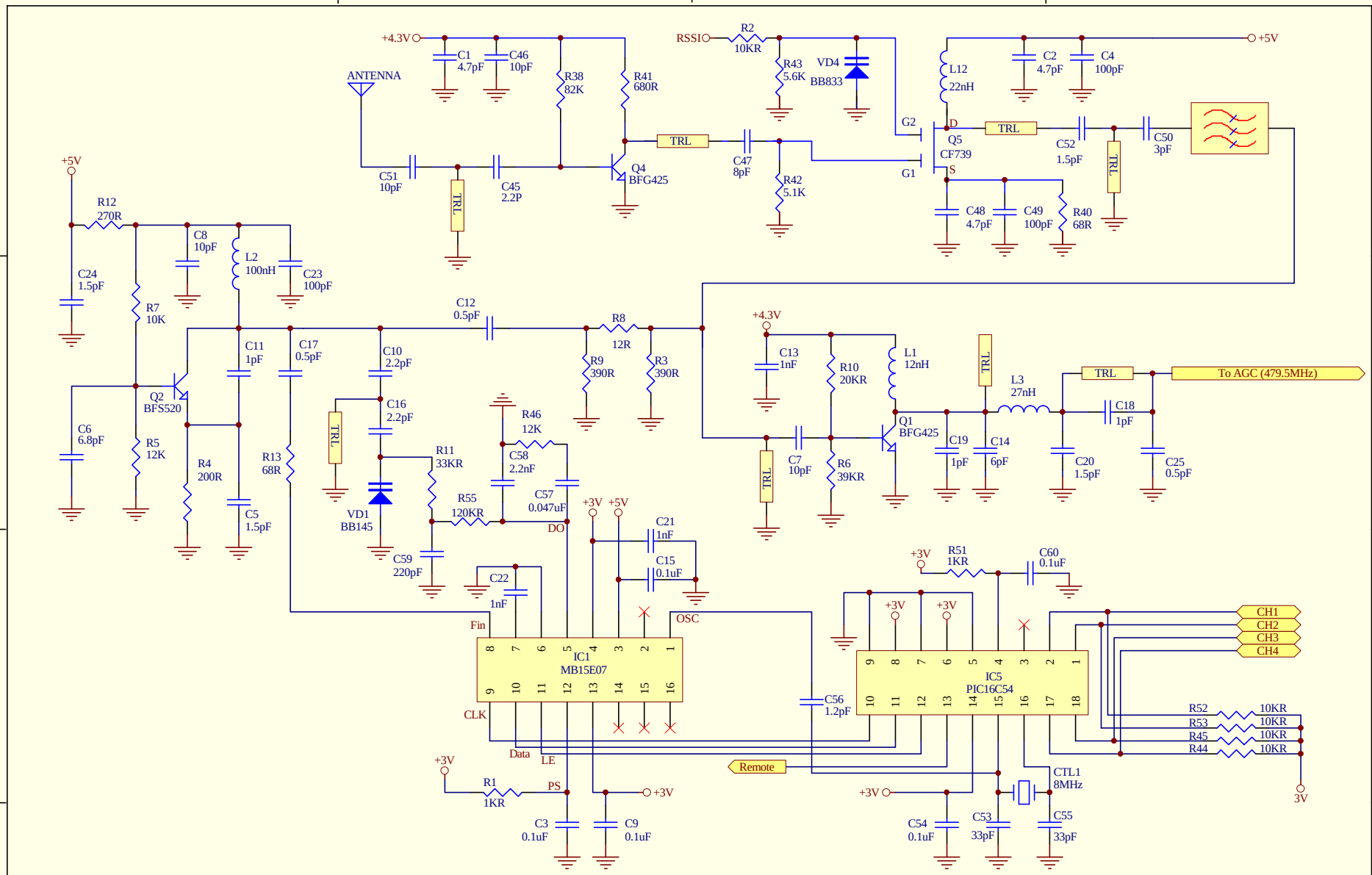

(LNA & Lo. & Mixer)

REV.	ECN NO.	DESCRIPTION	DATE	ENGINEER

REVISIONS

Error : Awlogo.bmp file not found.

大紘科技股份有限公司

AIRWAVE TECHNOLOGIES INC.

DRAW BY	Xin	SIZE	DWG TITLE (USE TDA9820) AWM620RX-WITHOUT-INV-VC_RF Circuit
ENG. BY	Xin		REV. D
ISSUED BY	HS Chou		DWG NO. 93 03 12
			PAGE 1 of 3

PDF created with FinePrint pdfFactory Pro trial version http://www.pdffactory.com