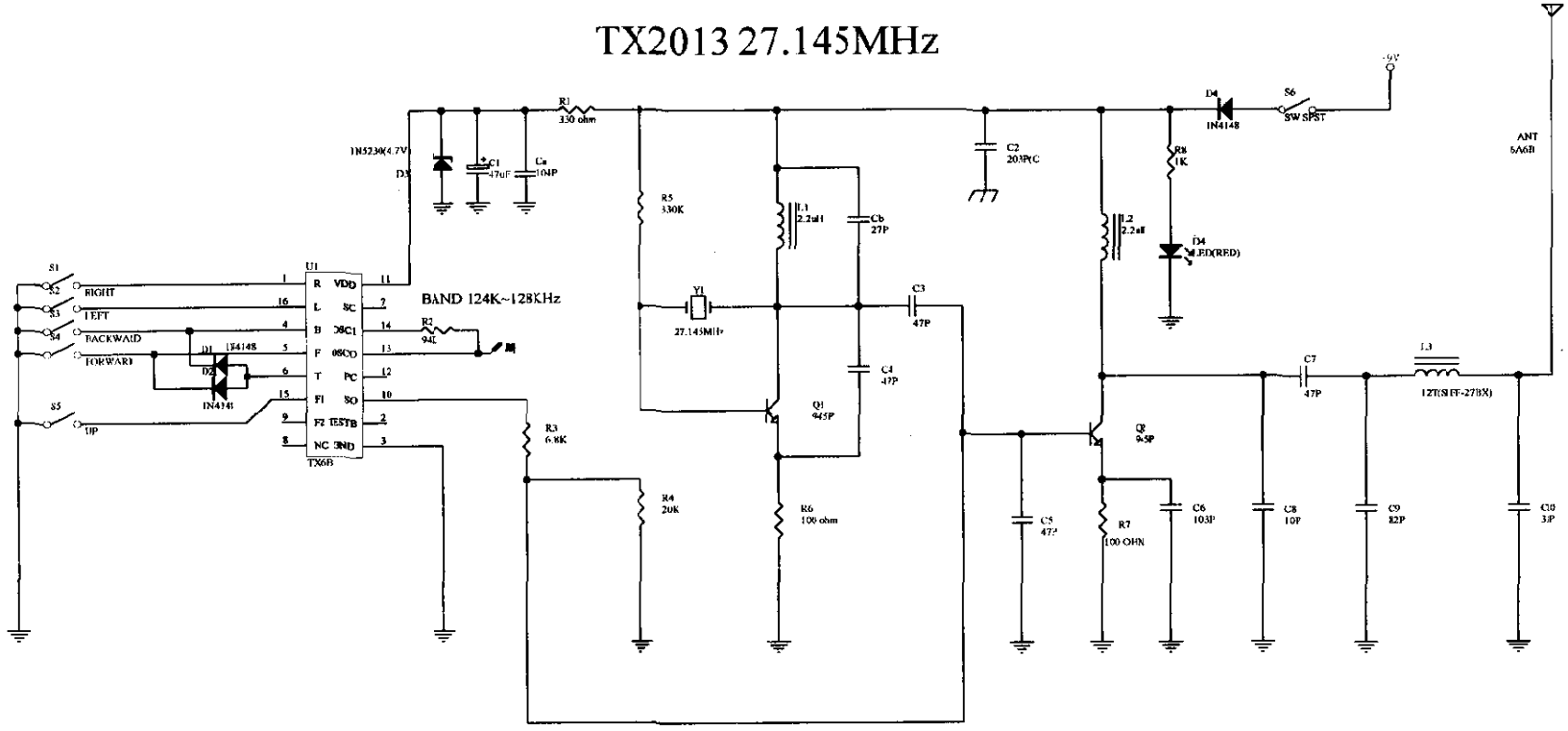TX2013 27.145MHz