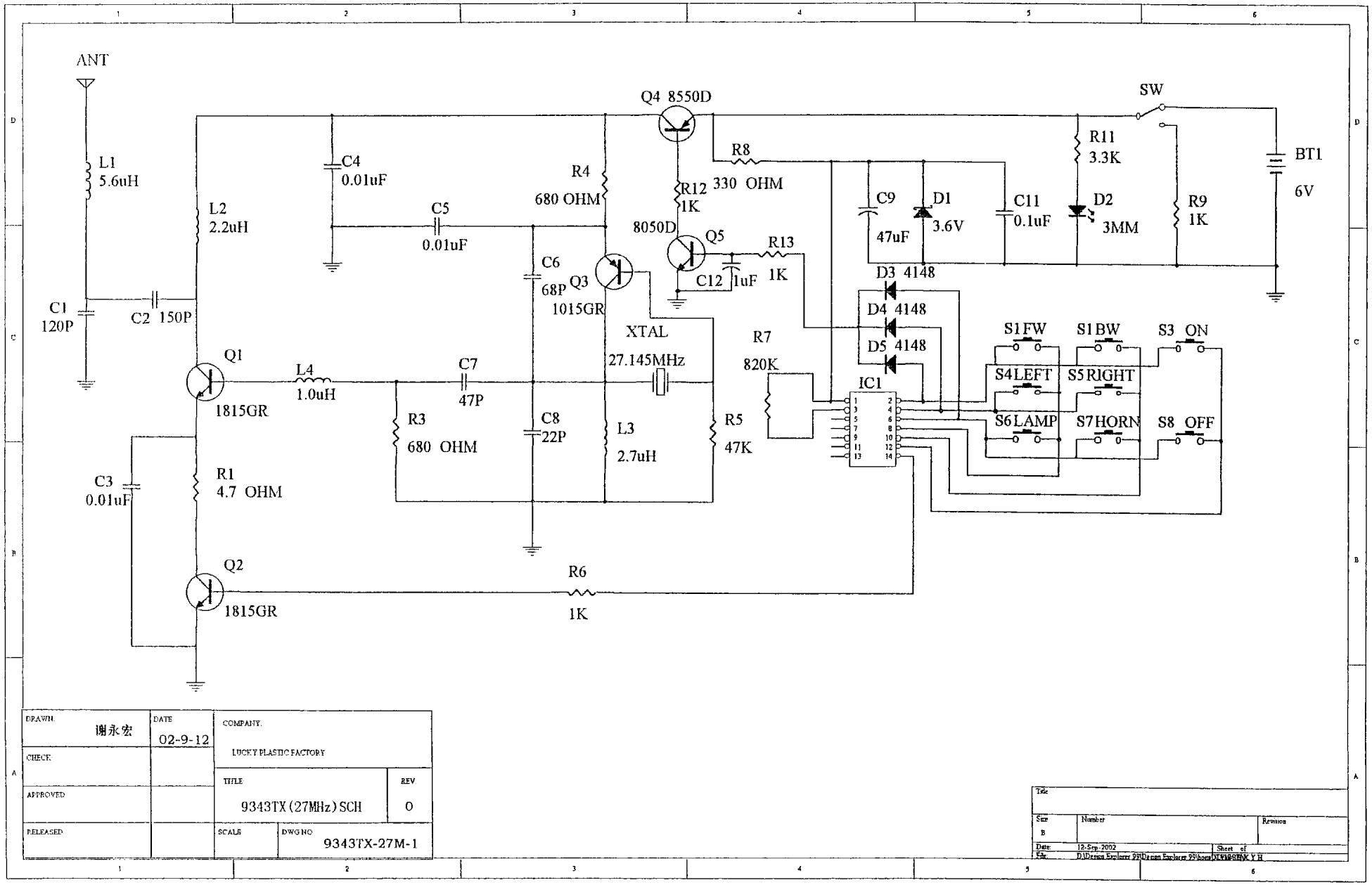
ANT
L1
5.6uH
C1
120P
C2 150P
L2
2.2uH
C4
0.01uF
C5
0.01uF
Q1
1815GR
L4
1.0uH
C7
47P
R3
680 OHM
C3
0.01uF
R1
4.7 OHM
Q2
1815GR
R6
1K
R4
680 OHM
C6
68P
Q3
1015GR
C8
22P
XTAL
27.145MHz
L3
2.7uH
R5
47K
Q4 8550D
R12
1K
8050D
Q5
C12 1uF
R13
1K
R8
330 OHM
R7
820K
IC1
C9
47uF
D1
3.6V
C11
0.1uF
D2
3MM
R11
3.3K
R9
1K
SW
BT1
6V
D3 4148
D4 4148
D5 4148
S1FW
S1BW
S3 ON
S4LEFT
S5RIGHT
S6LAMP
S7HORN
S8 OFF
DRAWN
谢永宏
DATE
02-9-12
COMPANY
LUCKY PLASTIC FACTORY
CHECK
APPROVED
RELEASED
TITLE
9343TX(27MHz)SCH
REV
0
SCALE
DWG NO
9343TX-27M-1
Title
Size
B
Number
Revision
Date: 12-Sep-2002
Sheet of