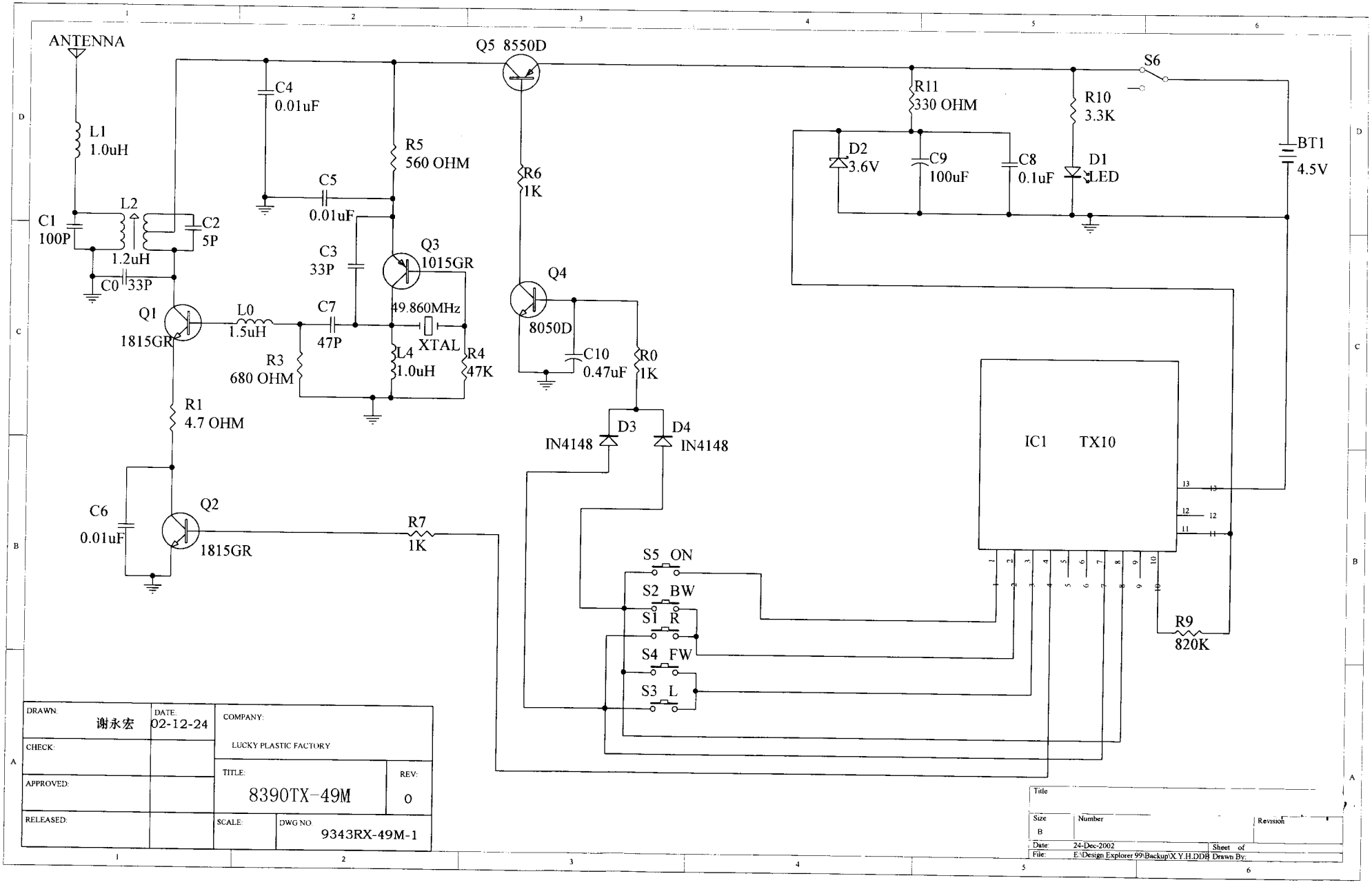
ANTENNA
L1
1.0uH
C1
100P
L2
1.2uH
C2
5P
C0
33P
Q1
1815GR
L0
1.5uH
R1
4.7 OHM
C6
0.01uF
Q2
1815GR
R7
1K
C4
0.01uF
C5
0.01uF
R5
560 OHM
C3
33P
Q3
1015GR
C7
47P
49.860MHz
XTAL
R3
680 OHM
L4
1.0uH
R4
47K
Q5 8550D
R6
1K
Q4
8050D
C10
0.47uF
R0
1K
D3
IN4148
D4
IN4148
R11
330 OHM
D2
3.6V
C9
100uF
C8
0.1uF
R10
3.3K
D1
LED
S6
BT1
4.5V
IC1 TX10
R9
820K
S5 ON
S2 BW
S1 R
S4 FW
S3 L
DRAWN: 谢永宏
DATE: 02-12-24
COMPANY: LUCKY PLASTIC FACTORY
CHECK:
APPROVED:
RELEASED:
TITLE: 8390TX-49M
REV: 0
SCALE:
DWG NO: 9343RX-49M-1
Title
Size B
Number
Revision
Date: 24-Dec-2002
Sheet of
File: E:\Design Explorer 99\Backup\X.Y.H.DDB
Drawn By: