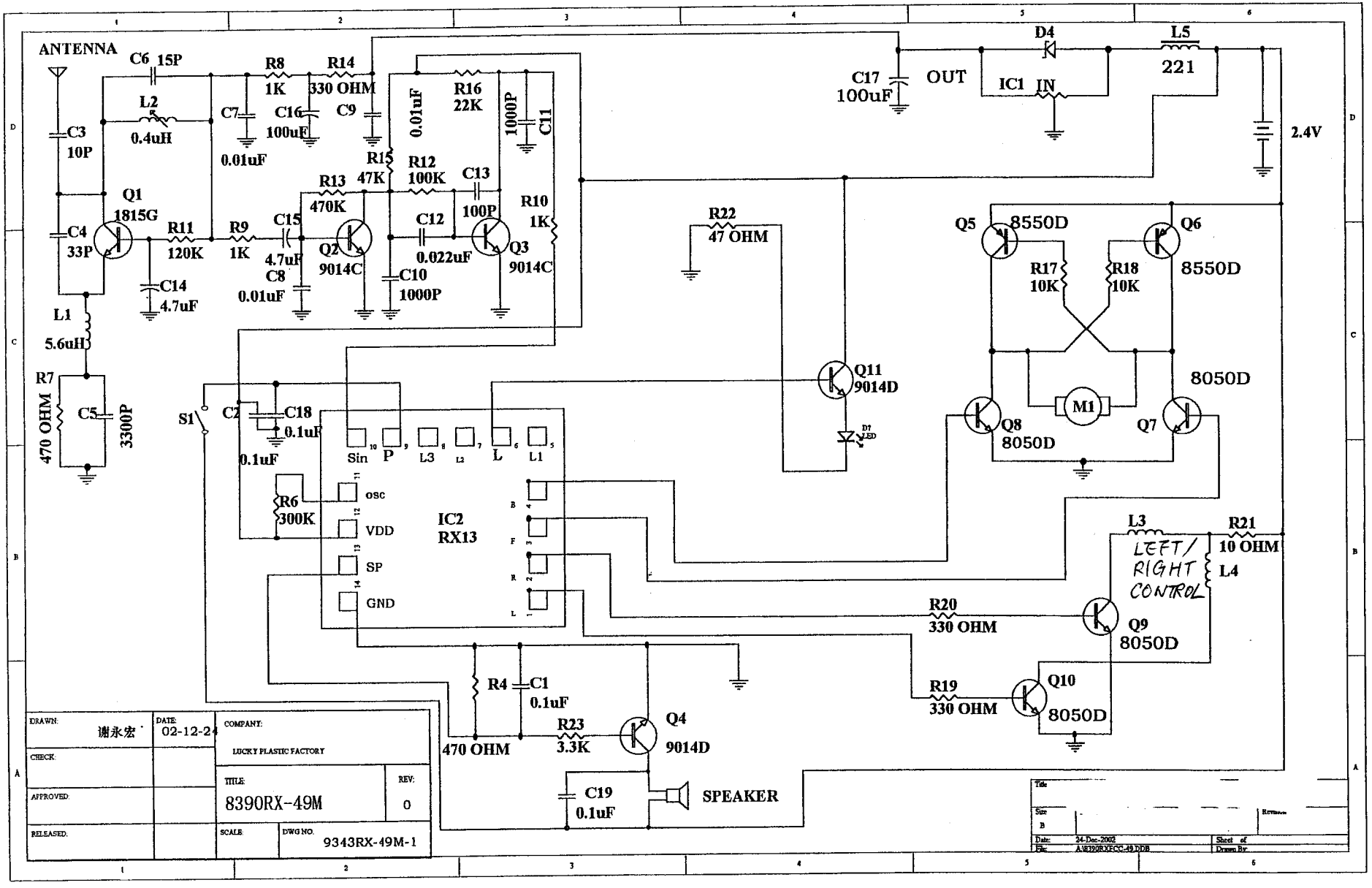
ANTENNA
C6 15P
L2
0.4uH
C3
10P
C4
33P
Q1
1815G
L1
5.6uH
R7
470 OHM
C5
3300P
C7
0.01uF
R8
1K
R14
330 OHM
C16
100uF
C9
0.01uF
R15
47K
R13
470K
R12
100K
R16
22K
C13
100P
1000P
C11
R10
1K
R11
120K
R9
1K
C15
4.7uF
C8
0.01uF
C14
4.7uF
Q2
9014C
C12
0.022uF
C10
1000P
Q3
9014C
C17
100uF
OUT
IC1
IN
D4
L5
221
2.4V
R22
47 OHM
Q5
8550D
Q6
8550D
R17
10K
R18
10K
M1
Q8
8050D
Q7
8050D
Q11
9014D
D1
LED
S1
C2
0.1uF
C18
0.1uF
Sin
P
L3
L2
L
L1
R6
300K
osc
VDD
SP
GND
IC2
RX13
B
F
R
L
L3
R21
10 OHM
L4
LEFT/
RIGHT
CONTROL
R20
330 OHM
Q9
8050D
R19
330 OHM
Q10
8050D
R4
470 OHM
C1
0.1uF
R23
3.3K
Q4
9014D
C19
0.1uF
SPEAKER
DRAWN: 谢永宏
DATE: 02-12-24
COMPANY: LUCKY PLASTIC FACTORY
CHECK:
APPROVED:
RELEASED:
TITLE: 8390RX-49M
REV: 0
SCALE:
DWG NO. 9343RX-49M-1
Title
Size B
Date: 24-Dec-2002
File: A8390RXECC-49.DDB
Sheet of
Drawn By: