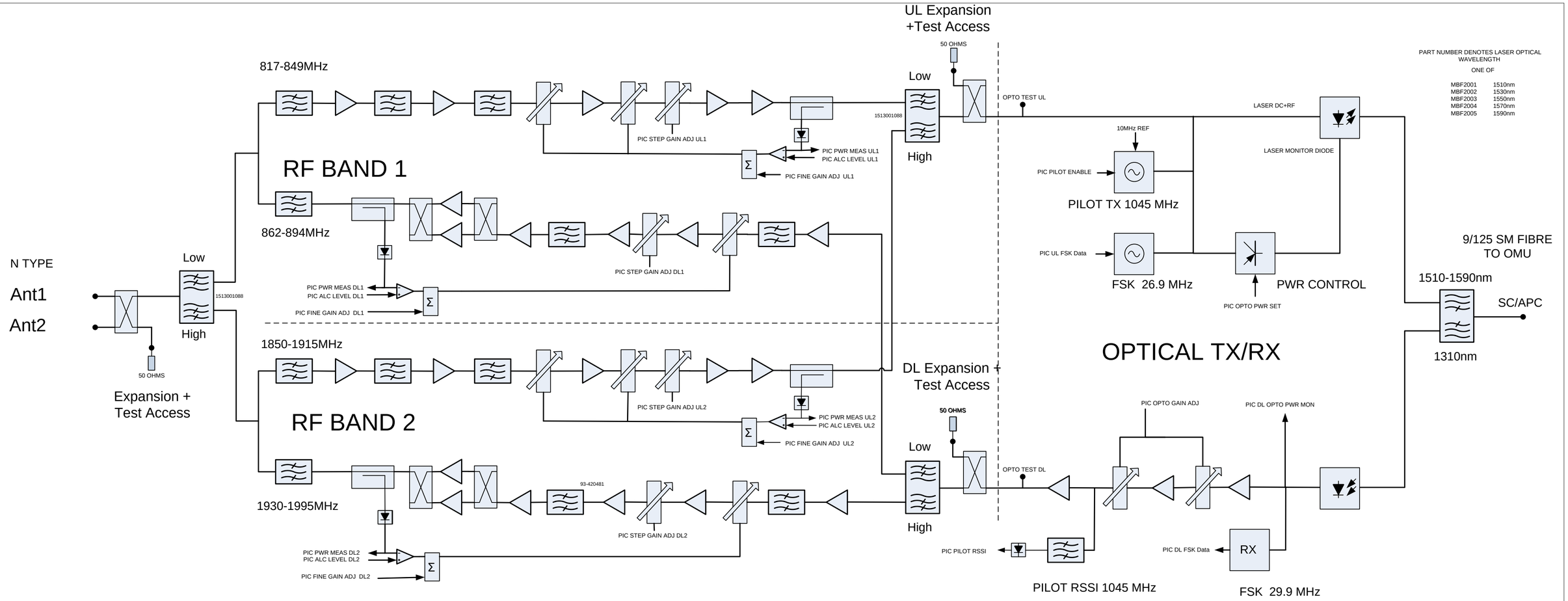

Date: Thursday, 13 March 2014

Aerial House
Asheridge Road
Chesham
Buckinghamshire
HP5 2QD United Kingdom

Telephone: +44 (0) 1494 777000
Facsimile: +44 (0) 1494 777002
E-Mail: sales@axellwireless.com
www.axellwireless.com

MBF2001-5 MBF2308-2319 Repeater Block Diagram

Not to Scale
Drawn by:Iqbal
Issue: 1
A3