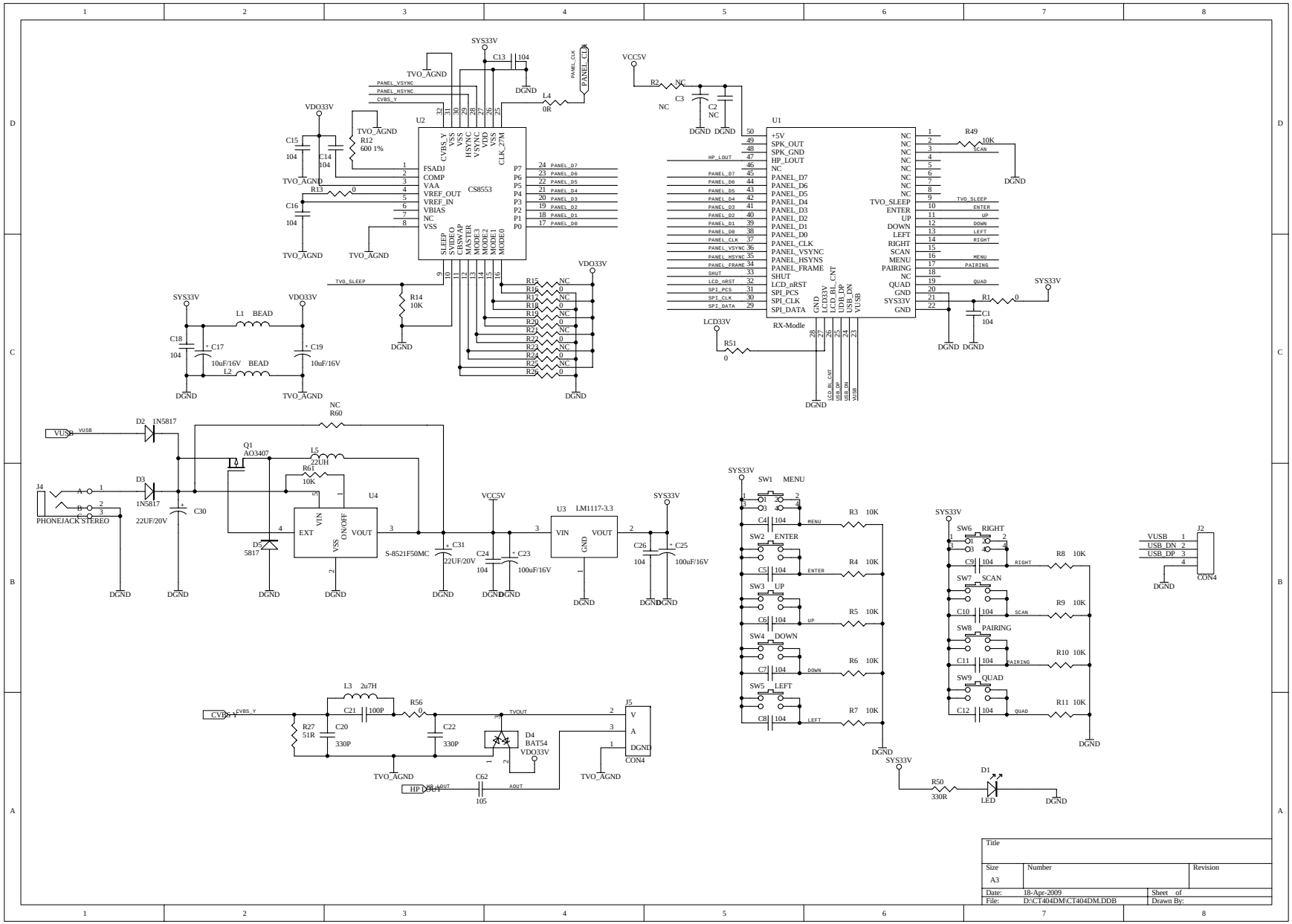
U2
CS8553
FSADJ
COMP
VAA
VREF_OUT
VREF_IN
VBIAS
NC
VSS
CVBS_Y
HSYNC
VSYNC
CLK_27M
SLEEP
SYDEO
CBSWAP
MASTER
MODE3
MODE2
MODE1
MODE0
P7
P6
P5
P4
P3
P2
P1
P0
PANEL_D7
PANEL_D6
PANEL_D5
PANEL_D4
PANEL_D3
PANEL_D2
PANEL_D1
PANEL_D0
PANEL_CLK
PANEL_VSYNC
PANEL_HSYNC
PANEL_FRAME
TVO_SLEEP
SYS33V
VDO33V
VCC5V
TVO_AGND
DGND
U1
RX-Modle
+5V
SPK_OUT
SPK_GND
HP_LOUT
PANEL_HSYNS
SHUT
LCD_nRST
SPI_PCS
SPI_CLK
SPI_DATA
LCD33V
LCD_BL_CNT
USB_DP
USB_DN
VUSB
ENTER
UP
DOWN
LEFT
RIGHT
SCAN
MENU
PAIRING
QUAD
SW1 MENU
SW2 ENTER
SW3 UP
SW4 DOWN
SW5 LEFT
SW6 RIGHT
SW7 SCAN
SW8 PAIRING
SW9 QUAD
U3 LM1117-3.3
U4
S-8521F50MC
Q1 AO3407
D2 1N5817
D3 1N5817
D5 5817
J4
PHONEJACK STEREO
J2
CON4
J5
D4 BAT54
D1 LED
CVBS
HP OUT
Title
Size
A3
Number
Revision
Date: 18-Apr-2009
Sheet of
File: D:/CT404DM/CT404DM.DDB
Drawn By:

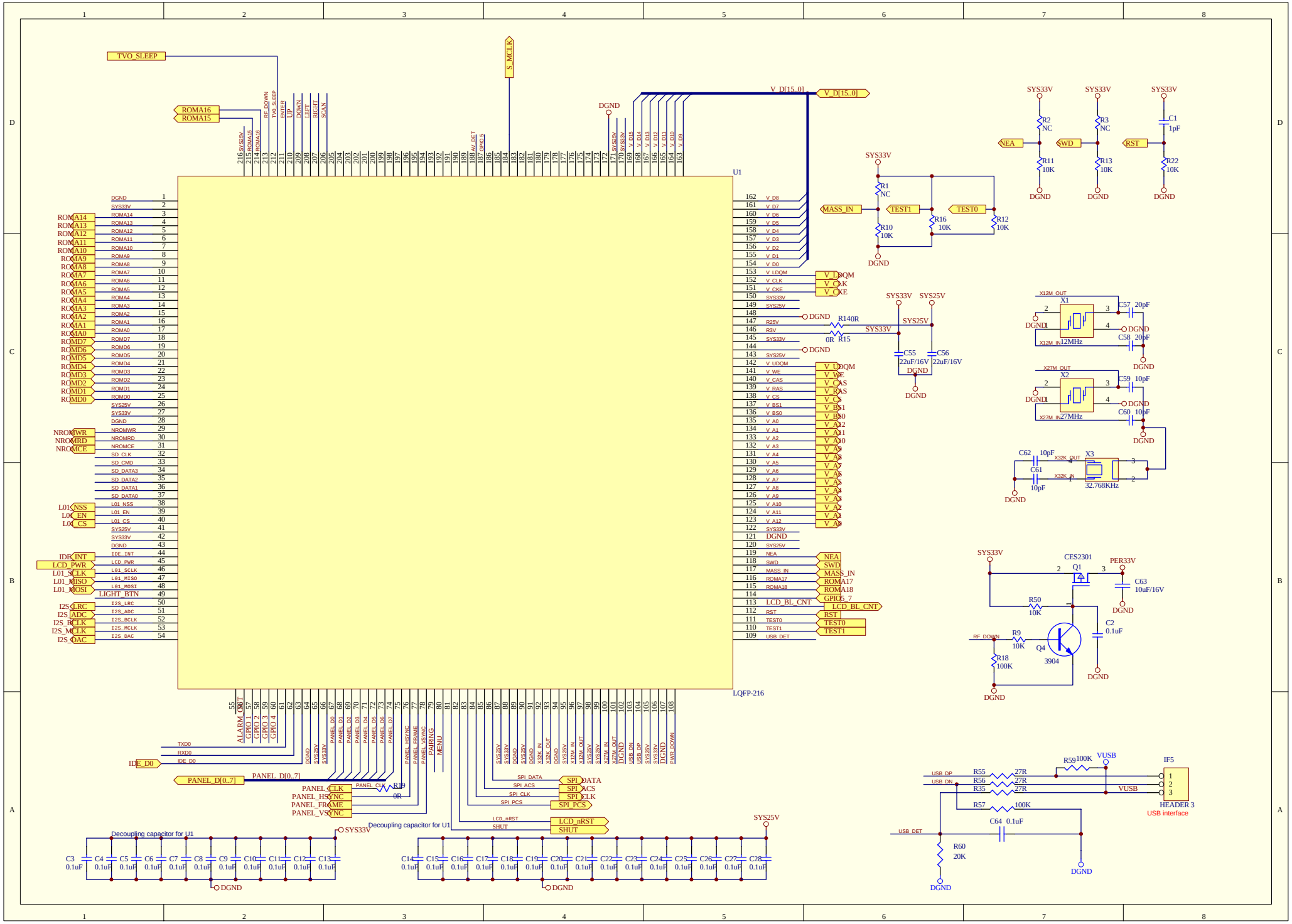
U1
LQFP-216
TVO_SLEEP
S_MCLK
V_D[15..0]
ROMA16
ROMA15
DGND
SYS33V
SYS25V
NEA
SWD
RST
MASS_IN
TEST1
TEST0
R1 NC
R2 NC
R3 NC
C1 1pF
R10 10K
R11 10K
R12 10K
R13 10K
R16 10K
R22 10K
R140R 0R
R15
C55 22uF/16V
C56 22uF/16V
X1 12MHz
X2 27MHz
X3 32.768KHz
C57 20pF
C58 20pF
C59 10pF
C60 10pF
C61 10pF
C62 10pF
CES2301
Q1
PER33V
C63 10uF/16V
R50 10K
R9 10K
R18 100K
Q4 3904
C2 0.1uF
RF_DOWN
LCD_BL_CNT
IDE_D0
PANEL_D[0..7]
PANEL_CLK
PANEL_HSYNC
PANEL_FRAME
PANEL_VSYNC
R19 0R
SPI_DATA
SPI_ACS
SPI_CLK
SPI_PCS
LCD_nRST
SHUT
Decoupling capacitor for U1
C3 0.1uF
C4 0.1uF
C5 0.1uF
C6 0.1uF
C7 0.1uF
C8 0.1uF
C9 0.1uF
C10 0.1uF
C11 0.1uF
C12 0.1uF
C13 0.1uF
C14 0.1uF
C15 0.1uF
C16 0.1uF
C17 0.1uF
C18 0.1uF
C19 0.1uF
C20 0.1uF
C21 0.1uF
C22 0.1uF
C23 0.1uF
C24 0.1uF
C25 0.1uF
C26 0.1uF
C27 0.1uF
C28 0.1uF
R55 27R
R56 27R
R35 27R
R57 100K
R59 100K
VUSB
USB_DP
USB_DN
USB_DET
C64 0.1uF
R60 20K
IF5
HEADER 3
USB interface

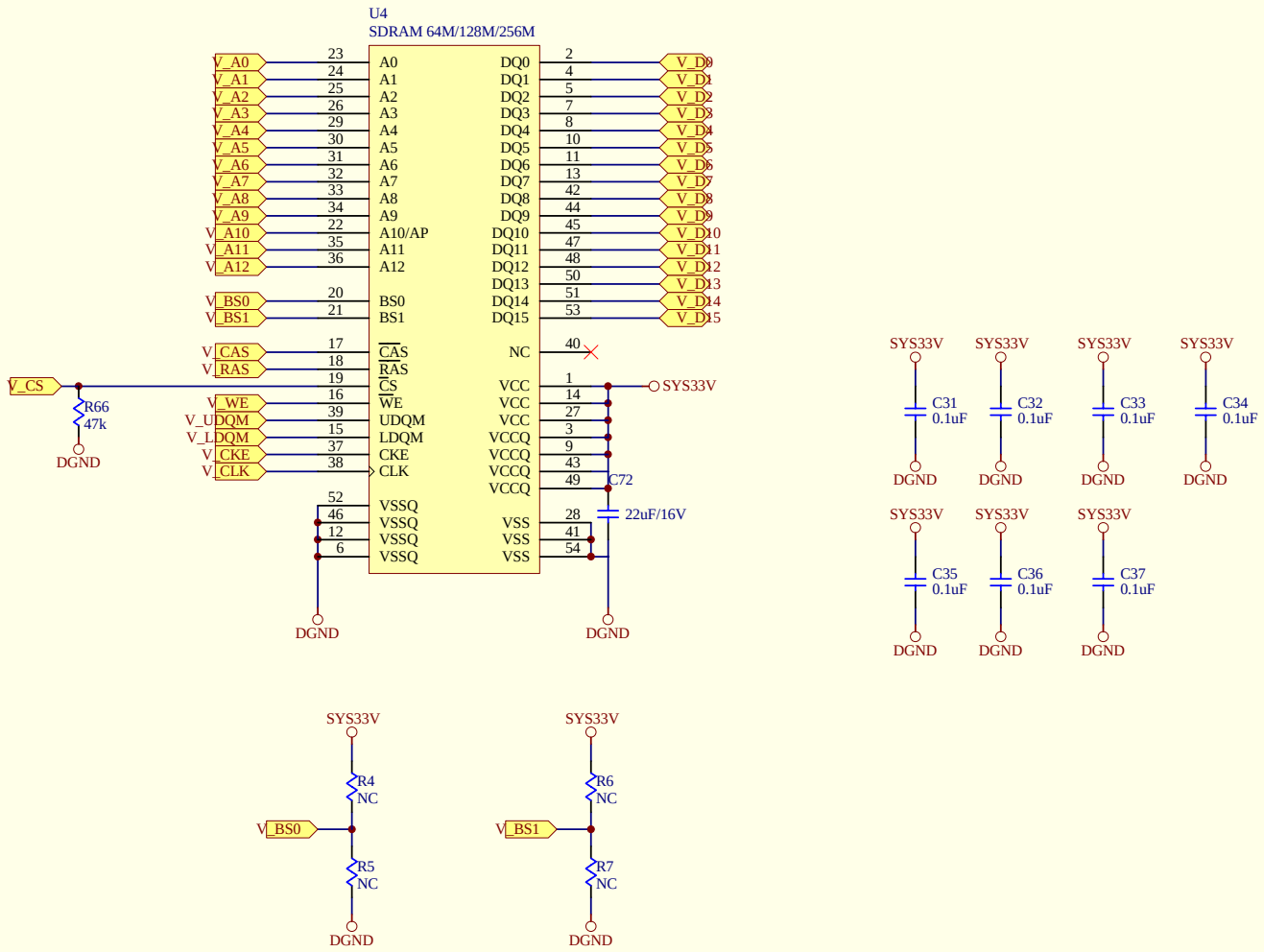
U4
SDRAM 64M/128M/256M
V_A0
V_A1
V_A2
V_A3
V_A4
V_A5
V_A6
V_A7
V_A8
V_A9
V_A10
V_A11
V_A12
V_BS0
V_BS1
V_CAS
V_RAS
V_CS
V_WE
V_UDQM
V_LDQM
V_CKE
V_CLK
A0
A1
A2
A3
A4
A5
A6
A7
A8
A9
A10/AP
A11
A12
BS0
BS1
CAS
RAS
CS
WE
UDQM
LDQM
CKE
CLK
VSSQ
DQ0
DQ1
DQ2
DQ3
DQ4
DQ5
DQ6
DQ7
DQ8
DQ9
DQ10
DQ11
DQ12
DQ13
DQ14
DQ15
NC
VCC
VCCQ
VSS
V_D0
V_D1
V_D2
V_D3
V_D4
V_D5
V_D6
V_D7
V_D8
V_D9
V_D10
V_D11
V_D12
V_D13
V_D14
V_D15
R66
47k
DGND
SYS33V
C72
22uF/16V
C31
0.1uF
C32
0.1uF
C33
0.1uF
C34
0.1uF
C35
0.1uF
C36
0.1uF
C37
0.1uF
R4
NC
R5
NC
R6
NC
R7
NC

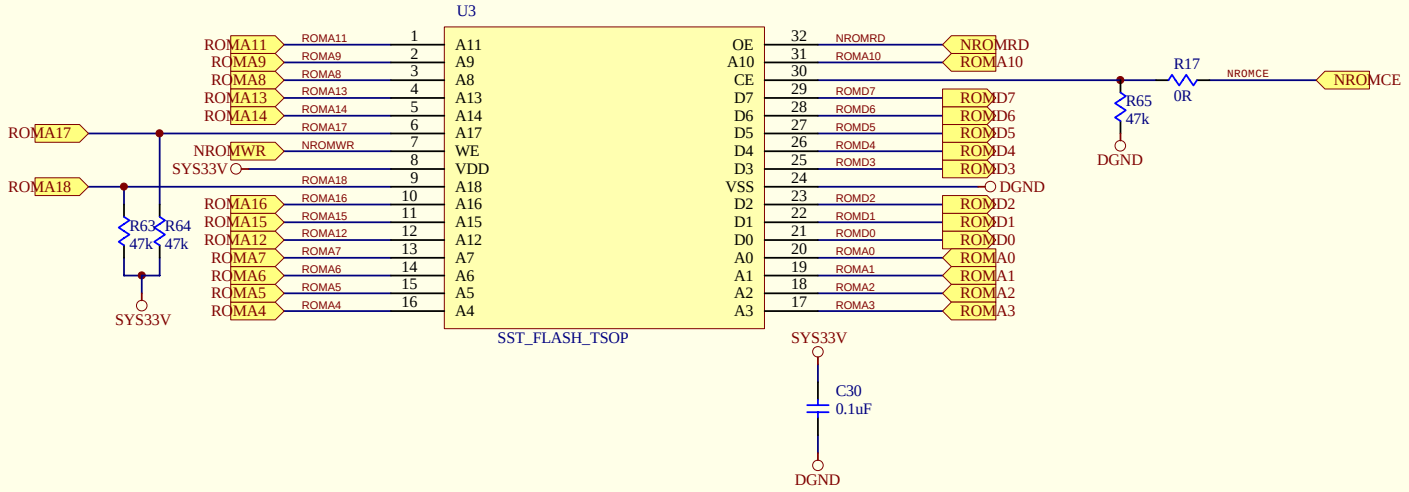
U3
ROMA11
ROMA9
ROMA8
ROMA13
ROMA14
ROMA17
NROMWR
SYS33V
ROMA18
ROMA16
ROMA15
ROMA12
ROMA7
ROMA6
ROMA5
ROMA4
R63
47k
R64
47k
SYS33V
A11
A9
A8
A13
A14
A17
WE
VDD
A18
A16
A15
A12
A7
A6
A5
A4
OE
A10
CE
D7
D6
D5
D4
D3
VSS
D2
D1
D0
A0
A1
A2
A3
NROMRD
ROMA10
ROMD7
ROMD6
ROMD5
ROMD4
ROMD3
DGND
ROMD2
ROMD1
ROMD0
ROMA0
ROMA1
ROMA2
ROMA3
SST_FLASH_TSOP
R17
0R
NROMCE
R65
47k
DGND
SYS33V
C30
0.1uF
DGND

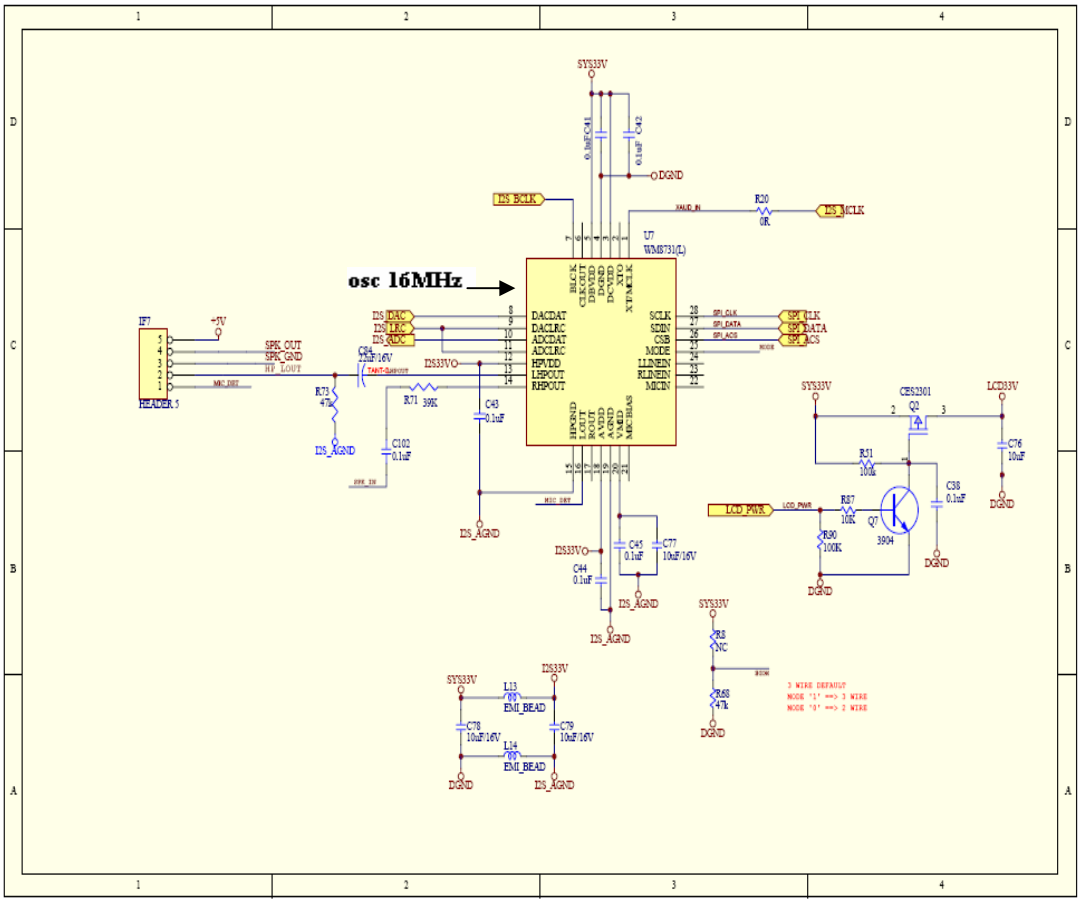
osc 16MHz
U7
WM8731(L)
SYS33V
DGND
I2S_BCLK
I2S_MCLK
XTAL_IN
R20
0R
I2S_DAC
I2S_LRC
I2S_ADC
SPI_CLK
SPI_DATA
SPI_CS
SPI_CLK
SPI_DATA
SPI_ACS
MODE
BLCK
CLKOUT
DBVDD
DVDD
DCVDD
XTO
XTI/MCLK
DACDAT
DACLRC
ADCDAT
ADCLRC
HPVDD
LHPOUT
RHPOUT
SCLK
SDIN
CSB
MODE
LLINEIN
RLINEIN
MICIN
HPGND
LOUT
ROUT
AVDD
AGND
VMID
MIC BIAS
IF7
HEADER 5
+5V
SPK_OUT
SPK_GND
HP_LOUT
MIC DET
R73
47k
I2S_AGND
C64
22uF/16V
TANT-SMDOUT
I2S33VO
R71
39K
C102
0.1uF
C43
0.1uF
SPK_IN
MIC DET
I2S_AGND
C45
0.1uF
C77
10uF/16V
C44
0.1uF
I2S_AGND
I2S_AGND
SYS33V
CES2301
Q2
LCD33V
R51
100k
C76
10uF
C38
0.1uF
DGND
LCD PWR
LCD_PWR
R87
10K
Q7
3904
R90
100K
DGND
DGND
SYS33V
R8
NC
MODE
R68
47k
DGND
3 WIRE DEFAULT
MODE '1' ==> 3 WIRE
MODE '0' ==> 2 WIRE
SYS33V
L13
0R
EMI_BEAD
I2S33V
C78
10uF/16V
C79
10uF/16V
L14
0R
EMI_BEAD
DGND
I2S_AGND

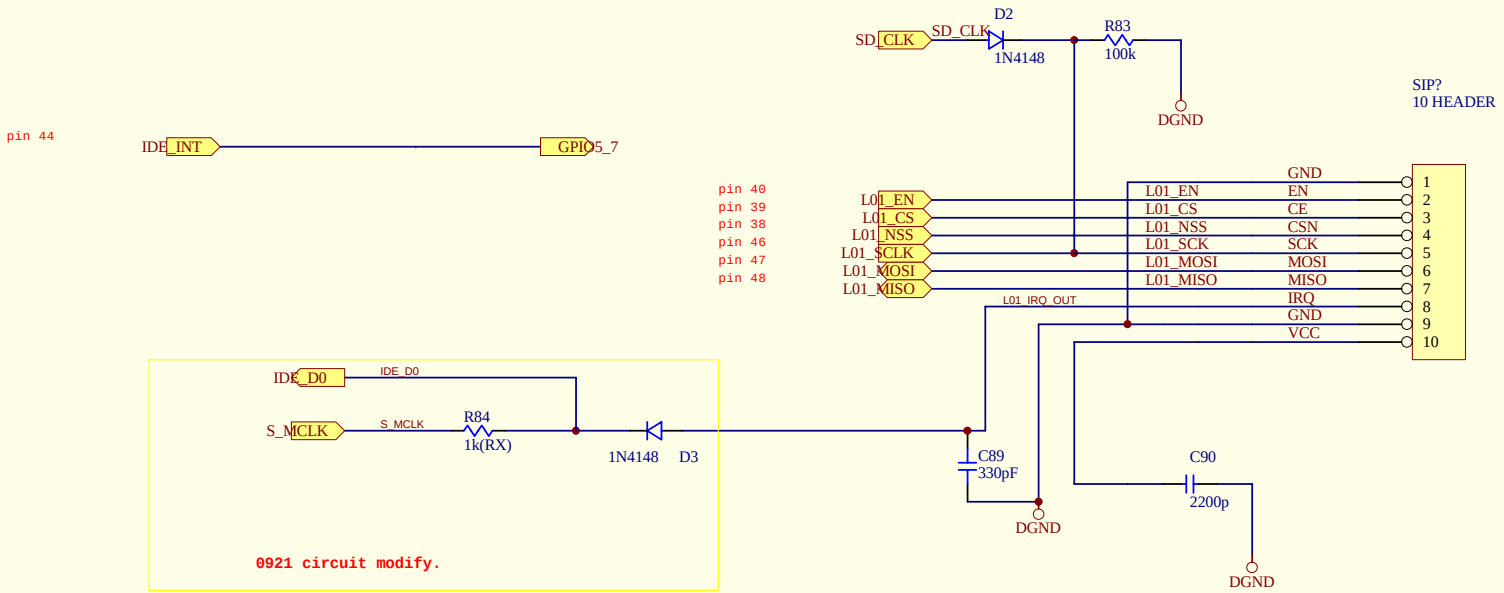
SD_CLK
SD_CLK
D2
1N4148
R83
100k
DGND
SIP?
10 HEADER
pin 44
IDE_INT
GPIO5_7
pin 40
pin 39
pin 38
pin 46
pin 47
pin 48
L01_EN
L01_CS
L01_NSS
L01_SCLK
L01_MOSI
L01_MISO
L01_EN
L01_CS
L01_NSS
L01_SCK
L01_MOSI
L01_MISO
L01_IRQ_OUT
GND
EN
CE
CSN
SCK
MOSI
MISO
IRQ
GND
VCC
1
2
3
4
5
6
7
8
9
10
IDE_D0
IDE_D0
S_MCLK
S_MCLK
R84
1k(RX)
1N4148
D3
C89
330pF
DGND
C90
2200p
DGND
0921 circuit modify.