Testing for compliance with FCC rules 15-247e

Carl Andren
intersil Corporation
January 11, 2000
candren@intersil.com
321-724-7535

Scope

This report presents the test procedure, test configuration and test data associated with a FCC Part 15.247 (e) Jamming Margin test for the indirect measurement of processing gain.

Applicable Reference Documents.

1. "Operation within the bands 902-928 MHz, 2400-2483.5, and 5725-5850 MHz" ***Title 47 Part 15 section 247 (e) Code of Federal Regulations***. **(47 CFR 15.247).**

2. "Report and Order: Amendment of Parts 2 and 15 of the Commission's Rules Regarding Spread Spectrum Transmitters. Appendix C: 'Guidance on Measurements for Direct Sequence Spread Spectrum Systems" ***FCC 97-114. ET Docket No. 96-8, RM-8435, RM-8608, RM-8609.***

3. "HFA3861A Direct Sequence Spread Spectrum Baseband Processor" ***Harris Corporation Semiconductor Sector Preliminary Data Sheet***, Melbourne FL, July 1999.

4. " M-ary Orthogonal Keying BER Curve",

Test Background and Procedure.

According to FCC regulations [1], a direct sequence spread spectrum system must have a processing gain, G_p of at least 10 dB. Compliance to this requirement can be shown by demonstrating a relative bit-error-ratio (BER) performance improvement (and corresponding signal to noise ratio per symbol improvement of at least 10 dB) between the case where spread spectrum processes (coding, modulation) are engaged relative to

Lowest Channel
Out of 340 points 7 failed, so unit passes.

Jamming	Level	9.6	dBc	Jamming	Frequency	5727000	kHz	PER
Jamming	Level	9.6	dBc	Jamming	Frequency	5727050	kHz	PER
Jamming	Level	11.7	dBc	Jamming	Frequency	5727100	kHz	PER
Jamming	Level	11.5	dBc	Jamming	Frequency	5727150	kHz	PER
Jamming	Level	6.7	dBc	Jamming	Frequency	5727200	kHz	PER
Jamming	Level	6.6	dBc	Jamming	Frequency	5727250	kHz	PER
Jamming	Level	6.4	dBc	Jamming	Frequency	5727300	kHz	PER
Jamming	Level	6.2	dBc	Jamming	Frequency	5727350	kHz	PER
Jamming	Level	6.2	dBc	Jamming	Frequency	5727400	kHz	PER
Jamming	Level	6	dBc	Jamming	Frequency	5727450	kHz	PER
Jamming	Level	5.6	dBc	Jamming	Frequency	5727500	kHz	PER
Jamming	Level	6.6	dBc	Jamming	Frequency	5727550	kHz	PER
Jamming	Level	6.3	dBc	Jamming	Frequency	5727600	kHz	PER
Jamming	Level	5.7	dBc	Jamming	Frequency	5727650	kHz	PER
Jamming	Level	5.3	dBc	Jamming	Frequency	5727700	kHz	PER
Jamming	Level	5.3	dBc	Jamming	Frequency	5727750	kHz	PER
Jamming	Level	5.8	dBc	Jamming	Frequency	5727800	kHz	PER
Jamming	Level	6.2	dBc	Jamming	Frequency	5727850	kHz	PER
Jamming	Level	6.2	dBc	Jamming	Frequency	5727900	kHz	PER
Jamming	Level	6.2	dBc	Jamming	Frequency	5727950	kHz	PER
Jamming	Level	5.9	dBc	Jamming	Frequency	5728000	kHz	PER
Jamming	Level	5.5	dBc	Jamming	Frequency	5728050	kHz	PER
Jamming	Level	5.5	dBc	Jamming	Frequency	5728100	kHz	PER
Jamming	Level	4.9	dBc	Jamming	Frequency	5728150	kHz	PER
Jamming	Level	3.2	dBc	Jamming	Frequency	5728200	kHz	PER
Jamming	Level	3.2	dBc	Jamming	Frequency	5728250	kHz	PER
Jamming	Level	3.7	dBc	Jamming	Frequency	5728300	kHz	PER
Jamming	Level	3.9	dBc	Jamming	Frequency	5728350	kHz	PER
Jamming	Level	3.7	dBc	Jamming	Frequency	5728400	kHz	PER
Jamming	Level	2	dBc	Jamming	Frequency	5728450	kHz	PER
Jamming	Level	2	dBc	Jamming	Frequency	5728500	kHz	PER
Jamming	Level	3.2	dBc	Jamming	Frequency	5728550	kHz	PER
Jamming	Level	3.3	dBc	Jamming	Frequency	5728600	kHz	PER
Jamming	Level	2.5	dBc	Jamming	Frequency	5728650	kHz	PER
Jamming	Level	1.4	dBc	Jamming	Frequency	5728700	kHz	PER
Jamming	Level	1.5	dBc	Jamming	Frequency	5728750	kHz	PER
Jamming	Level	2.3	dBc	Jamming	Frequency	5728800	kHz	PER
Jamming	Level	3.3	dBc	Jamming	Frequency	5728850	kHz	PER
Jamming	Level	3.6	dBc	Jamming	Frequency	5728900	kHz	PER
Jamming	Level	3.7	dBc	Jamming	Frequency	5728950	kHz	PER
Jamming	Level	3.3	dBc	Jamming	Frequency	5729000	kHz	PER
Jamming	Level	2.8	dBc	Jamming	Frequency	5729050	kHz	PER
Jamming	Level	2.8	dBc	Jamming	Frequency	5729100	kHz	PER
Jamming	Level	2.4	dBc	Jamming	Frequency	5729150	kHz	PER
Jamming	Level	1.3	dBc	Jamming	Frequency	5729200	kHz	PER
Jamming	Level	0.8	dBc	Jamming	Frequency	5729250	kHz	PER
Jamming	Level	1.4	dBc	Jamming	Frequency	5729300	kHz	PER
Jamming	Level	2.3	dBc	Jamming	Frequency	5729350	kHz	PER
Jamming	Level	1.4	dBc	Jamming	Frequency	5729400	kHz	PER

Middle Channel
Out of 340 points 33 failed, so unit passes.

Jamming	Level	6.1	dBc	Jamming	Frequency	5767000	kHz	PER
Jamming	Level	8.2	dBc	Jamming	Frequency	5767050	kHz	PER
Jamming	Level	8.2	dBc	Jamming	Frequency	5767100	kHz	PER
Jamming	Level	8.2	dBc	Jamming	Frequency	5767150	kHz	PER
Jamming	Level	5.3	dBc	Jamming	Frequency	5767200	kHz	PER
Jamming	Level	5.3	dBc	Jamming	Frequency	5767250	kHz	PER
Jamming	Level	6.1	dBc	Jamming	Frequency	5767300	kHz	PER
Jamming	Level	6	dBc	Jamming	Frequency	5767350	kHz	PER
Jamming	Level	5.9	dBc	Jamming	Frequency	5767400	kHz	PER
Jamming	Level	4.8	dBc	Jamming	Frequency	5767450	kHz	PER
Jamming	Level	4.5	dBc	Jamming	Frequency	5767500	kHz	PER
Jamming	Level	5.5	dBc	Jamming	Frequency	5767550	kHz	PER
Jamming	Level	5.3	dBc	Jamming	Frequency	5767600	kHz	PER
Jamming	Level	5.2	dBc	Jamming	Frequency	5767650	kHz	PER
Jamming	Level	4.3	dBc	Jamming	Frequency	5767700	kHz	PER
Jamming	Level	4.1	dBc	Jamming	Frequency	5767750	kHz	PER
Jamming	Level	4.3	dBc	Jamming	Frequency	5767800	kHz	PER
Jamming	Level	4.8	dBc	Jamming	Frequency	5767850	kHz	PER
Jamming	Level	4.9	dBc	Jamming	Frequency	5767900	kHz	PER
Jamming	Level	5	dBc	Jamming	Frequency	5767950	kHz	PER
Jamming	Level	4.8	dBc	Jamming	Frequency	5768000	kHz	PER
Jamming	Level	4.5	dBc	Jamming	Frequency	5768050	kHz	PER
Jamming	Level	4.3	dBc	Jamming	Frequency	5768100	kHz	PER
Jamming	Level	3.1	dBc	Jamming	Frequency	5768150	kHz	PER
Jamming	Level	2.2	dBc	Jamming	Frequency	5768200	kHz	PER
Jamming	Level	2.2	dBc	Jamming	Frequency	5768250	kHz	PER
Jamming	Level	2.3	dBc	Jamming	Frequency	5768300	kHz	PER
Jamming	Level	2.6	dBc	Jamming	Frequency	5768350	kHz	PER
Jamming	Level	2.6	dBc	Jamming	Frequency	5768400	kHz	PER
Jamming	Level	0.9	dBc	Jamming	Frequency	5768450	kHz	PER
Jamming	Level	0.8	dBc	Jamming	Frequency	5768500	kHz	PER
Jamming	Level	2.3	dBc	Jamming	Frequency	5768550	kHz	PER
Jamming	Level	2.3	dBc	Jamming	Frequency	5768600	kHz	PER
Jamming	Level	1.3	dBc	Jamming	Frequency	5768650	kHz	PER
Jamming	Level	0.3	dBc	Jamming	Frequency	5768700	kHz	PER
Jamming	Level	0.4	dBc	Jamming	Frequency	5768750	kHz	PER
Jamming	Level	0.7	dBc	Jamming	Frequency	5768800	kHz	PER
Jamming	Level	1.8	dBc	Jamming	Frequency	5768850	kHz	PER
Jamming	Level	2.5	dBc	Jamming	Frequency	5768900	kHz	PER
Jamming	Level	2.6	dBc	Jamming	Frequency	5768950	kHz	PER
Jamming	Level	2	dBc	Jamming	Frequency	5769000	kHz	PER
Jamming	Level	1.6	dBc	Jamming	Frequency	5769050	kHz	PER
Jamming	Level	1.3	dBc	Jamming	Frequency	5769100	kHz	PER
Jamming	Level	0.8	dBc	Jamming	Frequency	5769150	kHz	PER
Jamming	Level	-0.1	dBc	Jamming	Frequency	5769200	kHz	PER
Jamming	Level	-0.3	dBc	Jamming	Frequency	5769250	kHz	PER
Jamming	Level	0.1	dBc	Jamming	Frequency	5769300	kHz	PER
Jamming	Level	1	dBc	Jamming	Frequency	5769350	kHz	PER

Highest Channel
Out of 340 points 36 failed, so unit passes.

Jamming	Level	8.1	dBc	Jamming	Frequency	5827000	kHz	PER
Jamming	Level	8.2	dBc	Jamming	Frequency	5827050	kHz	PER
Jamming	Level	8.6	dBc	Jamming	Frequency	5827100	kHz	PER
Jamming	Level	7.9	dBc	Jamming	Frequency	5827150	kHz	PER
Jamming	Level	5.4	dBc	Jamming	Frequency	5827200	kHz	PER
Jamming	Level	5.1	dBc	Jamming	Frequency	5827250	kHz	PER
Jamming	Level	5.8	dBc	Jamming	Frequency	5827300	kHz	PER
Jamming	Level	5.7	dBc	Jamming	Frequency	5827350	kHz	PER
Jamming	Level	5.4	dBc	Jamming	Frequency	5827400	kHz	PER
Jamming	Level	4.2	dBc	Jamming	Frequency	5827450	kHz	PER
Jamming	Level	3.9	dBc	Jamming	Frequency	5827500	kHz	PER
Jamming	Level	5	dBc	Jamming	Frequency	5827550	kHz	PER
Jamming	Level	5	dBc	Jamming	Frequency	5827600	kHz	PER
Jamming	Level	4.7	dBc	Jamming	Frequency	5827650	kHz	PER
Jamming	Level	3.8	dBc	Jamming	Frequency	5827700	kHz	PER
Jamming	Level	3.8	dBc	Jamming	Frequency	5827750	kHz	PER
Jamming	Level	4.1	dBc	Jamming	Frequency	5827800	kHz	PER
Jamming	Level	4.1	dBc	Jamming	Frequency	5827850	kHz	PER
Jamming	Level	4.1	dBc	Jamming	Frequency	5827900	kHz	PER
Jamming	Level	4.7	dBc	Jamming	Frequency	5827950	kHz	PER
Jamming	Level	4.4	dBc	Jamming	Frequency	5828000	kHz	PER
Jamming	Level	3.8	dBc	Jamming	Frequency	5828050	kHz	PER
Jamming	Level	3.3	dBc	Jamming	Frequency	5828100	kHz	PER
Jamming	Level	2.8	dBc	Jamming	Frequency	5828150	kHz	PER
Jamming	Level	1.4	dBc	Jamming	Frequency	5828200	kHz	PER
Jamming	Level	1.2	dBc	Jamming	Frequency	5828250	kHz	PER
Jamming	Level	2.2	dBc	Jamming	Frequency	5828300	kHz	PER
Jamming	Level	2.3	dBc	Jamming	Frequency	5828350	kHz	PER
Jamming	Level	2.1	dBc	Jamming	Frequency	5828400	kHz	PER
Jamming	Level	0.7	dBc	Jamming	Frequency	5828450	kHz	PER
Jamming	Level	0.6	dBc	Jamming	Frequency	5828500	kHz	PER
Jamming	Level	1.7	dBc	Jamming	Frequency	5828550	kHz	PER
Jamming	Level	1.9	dBc	Jamming	Frequency	5828600	kHz	PER
Jamming	Level	0.9	dBc	Jamming	Frequency	5828650	kHz	PER
Jamming	Level	-0.1	dBc	Jamming	Frequency	5828700	kHz	PER
Jamming	Level	0	dBc	Jamming	Frequency	5828750	kHz	PER
Jamming	Level	0.1	dBc	Jamming	Frequency	5828800	kHz	PER
Jamming	Level	1.6	dBc	Jamming	Frequency	5828850	kHz	PER
Jamming	Level	1.7	dBc	Jamming	Frequency	5828900	kHz	PER
Jamming	Level	1.9	dBc	Jamming	Frequency	5828950	kHz	PER
Jamming	Level	1.4	dBc	Jamming	Frequency	5829000	kHz	PER
Jamming	Level	0.8	dBc	Jamming	Frequency	5829050	kHz	PER
Jamming	Level	0.8	dBc	Jamming	Frequency	5829100	kHz	PER
Jamming	Level	0.6	dBc	Jamming	Frequency	5829150	kHz	PER
Jamming	Level	-0.6	dBc	Jamming	Frequency	5829200	kHz	PER
Jamming	Level	-0.9	dBc	Jamming	Frequency	5829250	kHz	PER
Jamming	Level	-0.1	dBc	Jamming	Frequency	5829300	kHz	PER
Jamming	Level	0.5	dBc	Jamming	Frequency	5829350	kHz	PER

Jamming	Level	0	dBc	Jamming	Frequency	5829400	kHz	PER
Jamming	Level	-1.6	dBc	Jamming	Frequency	5829450	kHz	PER
Jamming	Level	-1.9	dBc	Jamming	Frequency	5829500	kHz	PER
Jamming	Level	-1.2	dBc	Jamming	Frequency	5829550	kHz	PER
Jamming	Level	-0.8	dBc	Jamming	Frequency	5829600	kHz	PER
Jamming	Level	-2.9	dBc	Jamming	Frequency	5829650	kHz	PER
Jamming	Level	-3.3	dBc	Jamming	Frequency	5829700	kHz	PER
Jamming	Level	-3.8	dBc	Jamming	Frequency	5829750	kHz	PER
Jamming	Level	-3.8	dBc	Jamming	Frequency	5829800	kHz	PER
Jamming	Level	-3	dBc	Jamming	Frequency	5829850	kHz	PER
Jamming	Level	-1.9	dBc	Jamming	Frequency	5829900	kHz	PER
Jamming	Level	-2.6	dBc	Jamming	Frequency	5829950	kHz	PER
Jamming	Level	-3.3	dBc	Jamming	Frequency	5830000	kHz	PER
Jamming	Level	-3.3	dBc	Jamming	Frequency	5830050	kHz	PER
Jamming	Level	-4.7	dBc	Jamming	Frequency	5830100	kHz	PER
Jamming	Level	-6.4	dBc	Jamming	Frequency	5830150	kHz	PER
Jamming	Level	-7.9	dBc	Jamming	Frequency	5830200	kHz	PER
Jamming	Level	-9.3	dBc	Jamming	Frequency	5830250	kHz	PER
Jamming	Level	-8.3	dBc	Jamming	Frequency	5830300	kHz	PER
Jamming	Level	-7.9	dBc	Jamming	Frequency	5830350	kHz	PER
Jamming	Level	-7.9	dBc	Jamming	Frequency	5830400	kHz	PER
Jamming	Level	-7.9	dBc	Jamming	Frequency	5830450	kHz	PER
Jamming	Level	-7.8	dBc	Jamming	Frequency	5830500	kHz	PER
Jamming	Level	-7.8	dBc	Jamming	Frequency	5830550	kHz	PER
Jamming	Level	-8	dBc	Jamming	Frequency	5830600	kHz	PER
Jamming	Level	-9.2	dBc	Jamming	Frequency	5830650	kHz	PER
Jamming	Level	-10.8	dBc	Jamming	Frequency	5830700	kHz	PER
Jamming	Level	-10	dBc	Jamming	Frequency	5830750	kHz	PER
Jamming	Level	-7.3	dBc	Jamming	Frequency	5830800	kHz	PER
Jamming	Level	-6.3	dBc	Jamming	Frequency	5830850	kHz	PER
Jamming	Level	-4.6	dBc	Jamming	Frequency	5830900	kHz	PER
Jamming	Level	-5	dBc	Jamming	Frequency	5830950	kHz	PER
Jamming	Level	-5	dBc	Jamming	Frequency	5831000	kHz	PER
Jamming	Level	-4.3	dBc	Jamming	Frequency	5831050	kHz	PER
Jamming	Level	-5.2	dBc	Jamming	Frequency	5831100	kHz	PER
Jamming	Level	-6.2	dBc	Jamming	Frequency	5831150	kHz	PER
Jamming	Level	-6.6	dBc	Jamming	Frequency	5831200	kHz	PER
Jamming	Level	-6.6	dBc	Jamming	Frequency	5831250	kHz	PER
Jamming	Level	-5.9	dBc	Jamming	Frequency	5831300	kHz	PER
Jamming	Level	-5.3	dBc	Jamming	Frequency	5831350	kHz	PER
Jamming	Level	-5.3	dBc	Jamming	Frequency	5831400	kHz	PER
Jamming	Level	-5.6	dBc	Jamming	Frequency	5831450	kHz	PER
Jamming	Level	-5.8	dBc	Jamming	Frequency	5831500	kHz	PER
Jamming	Level	-4.8	dBc	Jamming	Frequency	5831550	kHz	PER
Jamming	Level	-4	dBc	Jamming	Frequency	5831600	kHz	PER
Jamming	Level	-4.7	dBc	Jamming	Frequency	5831650	kHz	PER
Jamming	Level	-5	dBc	Jamming	Frequency	5831700	kHz	PER
Jamming	Level	-5.1	dBc	Jamming	Frequency	5831750	kHz	PER
Jamming	Level	-5.1	dBc	Jamming	Frequency	5831800	kHz	PER
Jamming	Level	-4.7	dBc	Jamming	Frequency	5831850	kHz	PER
Jamming	Level	-4.4	dBc	Jamming	Frequency	5831900	kHz	PER

Jamming	Level	-4.3 dBc	Jamming	Frequency	5831950 kHz	PER
Jamming	Level	-4.1 dBc	Jamming	Frequency	5832000 kHz	PER
Jamming	Level	-4.3 dBc	Jamming	Frequency	5832050 kHz	PER
Jamming	Level	-4.8 dBc	Jamming	Frequency	5832100 kHz	PER
Jamming	Level	-5.3 dBc	Jamming	Frequency	5832150 kHz	PER
Jamming	Level	-5.5 dBc	Jamming	Frequency	5832200 kHz	PER
Jamming	Level	-6 dBc	Jamming	Frequency	5832250 kHz	PER
Jamming	Level	-6 dBc	Jamming	Frequency	5832300 kHz	PER
Jamming	Level	-5.2 dBc	Jamming	Frequency	5832350 kHz	PER
Jamming	Level	-5.6 dBc	Jamming	Frequency	5832400 kHz	PER
Jamming	Level	-6.6 dBc	Jamming	Frequency	5832450 kHz	PER
Jamming	Level	-6.6 dBc	Jamming	Frequency	5832500 kHz	PER
Jamming	Level	-6.1 dBc	Jamming	Frequency	5832550 kHz	PER
Jamming	Level	-5 dBc	Jamming	Frequency	5832600 kHz	PER
Jamming	Level	-5.7 dBc	Jamming	Frequency	5832650 kHz	PER
Jamming	Level	-6.1 dBc	Jamming	Frequency	5832700 kHz	PER
Jamming	Level	-6.3 dBc	Jamming	Frequency	5832750 kHz	PER
Jamming	Level	-6.2 dBc	Jamming	Frequency	5832800 kHz	PER
Jamming	Level	-6 dBc	Jamming	Frequency	5832850 kHz	PER
Jamming	Level	-5.6 dBc	Jamming	Frequency	5832900 kHz	PER
Jamming	Level	-5.4 dBc	Jamming	Frequency	5832950 kHz	PER
Jamming	Level	-5.4 dBc	Jamming	Frequency	5833000 kHz	PER
Jamming	Level	-5.5 dBc	Jamming	Frequency	5833050 kHz	PER
Jamming	Level	-5.7 dBc	Jamming	Frequency	5833100 kHz	PER
Jamming	Level	-5.8 dBc	Jamming	Frequency	5833150 kHz	PER
Jamming	Level	-6.2 dBc	Jamming	Frequency	5833200 kHz	PER
Jamming	Level	-6.2 dBc	Jamming	Frequency	5833250 kHz	PER
Jamming	Level	-5.8 dBc	Jamming	Frequency	5833300 kHz	PER
Jamming	Level	-5.2 dBc	Jamming	Frequency	5833350 kHz	PER
Jamming	Level	-6 dBc	Jamming	Frequency	5833400 kHz	PER
Jamming	Level	-6.5 dBc	Jamming	Frequency	5833450 kHz	PER
Jamming	Level	-6.8 dBc	Jamming	Frequency	5833500 kHz	PER
Jamming	Level	-6.1 dBc	Jamming	Frequency	5833550 kHz	PER
Jamming	Level	-5.6 dBc	Jamming	Frequency	5833600 kHz	PER
Jamming	Level	-5.9 dBc	Jamming	Frequency	5833650 kHz	PER
Jamming	Level	-6.4 dBc	Jamming	Frequency	5833700 kHz	PER
Jamming	Level	-6.2 dBc	Jamming	Frequency	5833750 kHz	PER
Jamming	Level	-6.2 dBc	Jamming	Frequency	5833800 kHz	PER
Jamming	Level	-6.2 dBc	Jamming	Frequency	5833850 kHz	PER
Jamming	Level	-5.7 dBc	Jamming	Frequency	5833900 kHz	PER
Jamming	Level	-5.7 dBc	Jamming	Frequency	5833950 kHz	PER
Jamming	Level	-5.5 dBc	Jamming	Frequency	5834000 kHz	PER
Jamming	Level	-5.8 dBc	Jamming	Frequency	5834050 kHz	PER
Jamming	Level	-6.2 dBc	Jamming	Frequency	5834100 kHz	PER
Jamming	Level	-6.2 dBc	Jamming	Frequency	5834150 kHz	PER
Jamming	Level	-6.4 dBc	Jamming	Frequency	5834200 kHz	PER
Jamming	Level	-6.7 dBc	Jamming	Frequency	5834250 kHz	PER
Jamming	Level	-6.6 dBc	Jamming	Frequency	5834300 kHz	PER
Jamming	Level	-5.6 dBc	Jamming	Frequency	5834350 kHz	PER
Jamming	Level	-6.1 dBc	Jamming	Frequency	5834400 kHz	PER
Jamming	Level	-6.7 dBc	Jamming	Frequency	5834450 kHz	PER

Jamming	Level	-6.5 dBc	Jamming	Frequency	5834500 kHz	PER
Jamming	Level	-6.3 dBc	Jamming	Frequency	5834550 kHz	PER
Jamming	Level	-6.2 dBc	Jamming	Frequency	5834600 kHz	PER
Jamming	Level	-7 dBc	Jamming	Frequency	5834650 kHz	PER
Jamming	Level	-6.6 dBc	Jamming	Frequency	5834700 kHz	PER
Jamming	Level	-6.5 dBc	Jamming	Frequency	5834750 kHz	PER
Jamming	Level	-6.6 dBc	Jamming	Frequency	5834800 kHz	PER
Jamming	Level	-6.5 dBc	Jamming	Frequency	5834850 kHz	PER
Jamming	Level	-5.8 dBc	Jamming	Frequency	5834900 kHz	PER
Jamming	Level	-5.8 dBc	Jamming	Frequency	5834950 kHz	PER
Jamming	Level	-5.2 dBc	Jamming	Frequency	5835000 kHz	PER
Jamming	Level	-5.4 dBc	Jamming	Frequency	5835050 kHz	PER
Jamming	Level	-6.5 dBc	Jamming	Frequency	5835100 kHz	PER
Jamming	Level	-6.7 dBc	Jamming	Frequency	5835150 kHz	PER
Jamming	Level	-7.2 dBc	Jamming	Frequency	5835200 kHz	PER
Jamming	Level	-8.2 dBc	Jamming	Frequency	5835250 kHz	PER
Jamming	Level	-8.9 dBc	Jamming	Frequency	5835300 kHz	PER
Jamming	Level	-9.1 dBc	Jamming	Frequency	5835350 kHz	PER
Jamming	Level	-9.1 dBc	Jamming	Frequency	5835400 kHz	PER
Jamming	Level	-9.1 dBc	Jamming	Frequency	5835450 kHz	PER
Jamming	Level	-9.7 dBc	Jamming	Frequency	5835500 kHz	PER
Jamming	Level	-8.9 dBc	Jamming	Frequency	5835550 kHz	PER
Jamming	Level	-9.8 dBc	Jamming	Frequency	5835600 kHz	PER
Jamming	Level	-12.5 dBc	Jamming	Frequency	5835650 kHz	PER
Jamming	Level	-11.9 dBc	Jamming	Frequency	5835700 kHz	PER
Jamming	Level	-9.2 dBc	Jamming	Frequency	5835750 kHz	PER
Jamming	Level	-9 dBc	Jamming	Frequency	5835800 kHz	PER
Jamming	Level	-9 dBc	Jamming	Frequency	5835850 kHz	PER
Jamming	Level	-8.9 dBc	Jamming	Frequency	5835900 kHz	PER
Jamming	Level	-7 dBc	Jamming	Frequency	5835950 kHz	PER
Jamming	Level	-6.8 dBc	Jamming	Frequency	5836000 kHz	PER
Jamming	Level	-7.8 dBc	Jamming	Frequency	5836050 kHz	PER
Jamming	Level	-9.2 dBc	Jamming	Frequency	5836100 kHz	PER
Jamming	Level	-8.8 dBc	Jamming	Frequency	5836150 kHz	PER
Jamming	Level	-9.2 dBc	Jamming	Frequency	5836200 kHz	PER
Jamming	Level	-11.6 dBc	Jamming	Frequency	5836250 kHz	PER
Jamming	Level	-12.4 dBc	Jamming	Frequency	5836300 kHz	PER
Jamming	Level	-10.5 dBc	Jamming	Frequency	5836350 kHz	PER
Jamming	Level	-9.3 dBc	Jamming	Frequency	5836400 kHz	PER
Jamming	Level	-9.3 dBc	Jamming	Frequency	5836450 kHz	PER
Jamming	Level	-9.3 dBc	Jamming	Frequency	5836500 kHz	PER
Jamming	Level	-9.2 dBc	Jamming	Frequency	5836550 kHz	PER
Jamming	Level	-9.3 dBc	Jamming	Frequency	5836600 kHz	PER
Jamming	Level	-9.6 dBc	Jamming	Frequency	5836650 kHz	PER
Jamming	Level	-8.3 dBc	Jamming	Frequency	5836700 kHz	PER
Jamming	Level	-7.2 dBc	Jamming	Frequency	5836750 kHz	PER
Jamming	Level	-6.8 dBc	Jamming	Frequency	5836800 kHz	PER
Jamming	Level	-6.2 dBc	Jamming	Frequency	5836850 kHz	PER
Jamming	Level	-5.4 dBc	Jamming	Frequency	5836900 kHz	PER
Jamming	Level	-5.3 dBc	Jamming	Frequency	5836950 kHz	PER
Jamming	Level	-5.4 dBc	Jamming	Frequency	5837000 kHz	PER

Jamming	Level	-5.8 dBc	Jamming	Frequency	5837050 kHz	PER
Jamming	Level	-5.9 dBc	Jamming	Frequency	5837100 kHz	PER
Jamming	Level	-6.3 dBc	Jamming	Frequency	5837150 kHz	PER
Jamming	Level	-6.8 dBc	Jamming	Frequency	5837200 kHz	PER
Jamming	Level	-7 dBc	Jamming	Frequency	5837250 kHz	PER
Jamming	Level	-6.6 dBc	Jamming	Frequency	5837300 kHz	PER
Jamming	Level	-6.2 dBc	Jamming	Frequency	5837350 kHz	PER
Jamming	Level	-6.1 dBc	Jamming	Frequency	5837400 kHz	PER
Jamming	Level	-6.8 dBc	Jamming	Frequency	5837450 kHz	PER
Jamming	Level	-6.4 dBc	Jamming	Frequency	5837500 kHz	PER
Jamming	Level	-6.2 dBc	Jamming	Frequency	5837550 kHz	PER
Jamming	Level	-6.2 dBc	Jamming	Frequency	5837600 kHz	PER
Jamming	Level	-6.4 dBc	Jamming	Frequency	5837650 kHz	PER
Jamming	Level	-6.7 dBc	Jamming	Frequency	5837700 kHz	PER
Jamming	Level	-6.6 dBc	Jamming	Frequency	5837750 kHz	PER
Jamming	Level	-6.4 dBc	Jamming	Frequency	5837800 kHz	PER
Jamming	Level	-6.4 dBc	Jamming	Frequency	5837850 kHz	PER
Jamming	Level	-6.1 dBc	Jamming	Frequency	5837900 kHz	PER
Jamming	Level	-5.9 dBc	Jamming	Frequency	5837950 kHz	PER
Jamming	Level	-5.9 dBc	Jamming	Frequency	5838000 kHz	PER
Jamming	Level	-5.9 dBc	Jamming	Frequency	5838050 kHz	PER
Jamming	Level	-6.2 dBc	Jamming	Frequency	5838100 kHz	PER
Jamming	Level	-6.4 dBc	Jamming	Frequency	5838150 kHz	PER
Jamming	Level	-6.7 dBc	Jamming	Frequency	5838200 kHz	PER
Jamming	Level	-6.6 dBc	Jamming	Frequency	5838250 kHz	PER
Jamming	Level	-6.5 dBc	Jamming	Frequency	5838300 kHz	PER
Jamming	Level	-5.8 dBc	Jamming	Frequency	5838350 kHz	PER
Jamming	Level	-7 dBc	Jamming	Frequency	5838400 kHz	PER
Jamming	Level	-7 dBc	Jamming	Frequency	5838450 kHz	PER
Jamming	Level	-7.3 dBc	Jamming	Frequency	5838500 kHz	PER
Jamming	Level	-7.1 dBc	Jamming	Frequency	5838550 kHz	PER
Jamming	Level	-6.3 dBc	Jamming	Frequency	5838600 kHz	PER
Jamming	Level	-6.3 dBc	Jamming	Frequency	5838650 kHz	PER
Jamming	Level	-7 dBc	Jamming	Frequency	5838700 kHz	PER
Jamming	Level	-6.6 dBc	Jamming	Frequency	5838750 kHz	PER
Jamming	Level	-6.7 dBc	Jamming	Frequency	5838800 kHz	PER
Jamming	Level	-6.5 dBc	Jamming	Frequency	5838850 kHz	PER
Jamming	Level	-6.4 dBc	Jamming	Frequency	5838900 kHz	PER
Jamming	Level	-5.8 dBc	Jamming	Frequency	5838950 kHz	PER
Jamming	Level	-5.8 dBc	Jamming	Frequency	5839000 kHz	PER
Jamming	Level	-6 dBc	Jamming	Frequency	5839050 kHz	PER
Jamming	Level	-6.6 dBc	Jamming	Frequency	5839100 kHz	PER
Jamming	Level	-6.7 dBc	Jamming	Frequency	5839150 kHz	PER
Jamming	Level	-7.5 dBc	Jamming	Frequency	5839200 kHz	PER
Jamming	Level	-7.4 dBc	Jamming	Frequency	5839250 kHz	PER
Jamming	Level	-6.8 dBc	Jamming	Frequency	5839300 kHz	PER
Jamming	Level	-6.5 dBc	Jamming	Frequency	5839350 kHz	PER
Jamming	Level	-6.7 dBc	Jamming	Frequency	5839400 kHz	PER
Jamming	Level	-7 dBc	Jamming	Frequency	5839450 kHz	PER
Jamming	Level	-7.4 dBc	Jamming	Frequency	5839500 kHz	PER
Jamming	Level	-6.7 dBc	Jamming	Frequency	5839550 kHz	PER

Jamming	Level	-6.1 dBc	Jamming	Frequency	5839600 kHz	PER
Jamming	Level	-6.7 dBc	Jamming	Frequency	5839650 kHz	PER
Jamming	Level	-6.8 dBc	Jamming	Frequency	5839700 kHz	PER
Jamming	Level	-6.8 dBc	Jamming	Frequency	5839750 kHz	PER
Jamming	Level	-6.3 dBc	Jamming	Frequency	5839800 kHz	PER
Jamming	Level	-5.9 dBc	Jamming	Frequency	5839850 kHz	PER
Jamming	Level	-5.5 dBc	Jamming	Frequency	5839900 kHz	PER
Jamming	Level	-5 dBc	Jamming	Frequency	5839950 kHz	PER
Jamming	Level	-5.1 dBc	Jamming	Frequency	5840000 kHz	PER
Jamming	Level	-5.2 dBc	Jamming	Frequency	5840050 kHz	PER
Jamming	Level	-5.1 dBc	Jamming	Frequency	5840100 kHz	PER
Jamming	Level	-5.4 dBc	Jamming	Frequency	5840150 kHz	PER
Jamming	Level	-5.9 dBc	Jamming	Frequency	5840200 kHz	PER
Jamming	Level	-5.8 dBc	Jamming	Frequency	5840250 kHz	PER
Jamming	Level	-5.2 dBc	Jamming	Frequency	5840300 kHz	PER
Jamming	Level	-3.9 dBc	Jamming	Frequency	5840350 kHz	PER
Jamming	Level	-4.7 dBc	Jamming	Frequency	5840400 kHz	PER
Jamming	Level	-5.7 dBc	Jamming	Frequency	5840450 kHz	PER
Jamming	Level	-6.1 dBc	Jamming	Frequency	5840500 kHz	PER
Jamming	Level	-5.1 dBc	Jamming	Frequency	5840550 kHz	PER
Jamming	Level	-4.5 dBc	Jamming	Frequency	5840600 kHz	PER
Jamming	Level	-6.3 dBc	Jamming	Frequency	5840650 kHz	PER
Jamming	Level	-6.2 dBc	Jamming	Frequency	5840700 kHz	PER
Jamming	Level	-6.7 dBc	Jamming	Frequency	5840750 kHz	PER
Jamming	Level	-6.6 dBc	Jamming	Frequency	5840800 kHz	PER
Jamming	Level	-5.8 dBc	Jamming	Frequency	5840850 kHz	PER
Jamming	Level	-4.4 dBc	Jamming	Frequency	5840900 kHz	PER
Jamming	Level	-4.6 dBc	Jamming	Frequency	5840950 kHz	PER
Jamming	Level	-5 dBc	Jamming	Frequency	5841000 kHz	PER
Jamming	Level	-5 dBc	Jamming	Frequency	5841050 kHz	PER
Jamming	Level	-6.5 dBc	Jamming	Frequency	5841100 kHz	PER
Jamming	Level	-7.8 dBc	Jamming	Frequency	5841150 kHz	PER
Jamming	Level	-9.1 dBc	Jamming	Frequency	5841200 kHz	PER
Jamming	Level	-9.8 dBc	Jamming	Frequency	5841250 kHz	PER
Jamming	Level	-9.7 dBc	Jamming	Frequency	5841300 kHz	PER
Jamming	Level	-8.8 dBc	Jamming	Frequency	5841350 kHz	PER
Jamming	Level	-8.4 dBc	Jamming	Frequency	5841400 kHz	PER
Jamming	Level	-8.4 dBc	Jamming	Frequency	5841450 kHz	PER
Jamming	Level	-8.3 dBc	Jamming	Frequency	5841500 kHz	PER
Jamming	Level	-8.1 dBc	Jamming	Frequency	5841550 kHz	PER
Jamming	Level	-8.3 dBc	Jamming	Frequency	5841600 kHz	PER
Jamming	Level	-9.2 dBc	Jamming	Frequency	5841650 kHz	PER
Jamming	Level	-9.9 dBc	Jamming	Frequency	5841700 kHz	PER
Jamming	Level	-9.2 dBc	Jamming	Frequency	5841750 kHz	PER
Jamming	Level	-7.1 dBc	Jamming	Frequency	5841800 kHz	PER
Jamming	Level	-6.1 dBc	Jamming	Frequency	5841850 kHz	PER
Jamming	Level	-3.8 dBc	Jamming	Frequency	5841900 kHz	PER
Jamming	Level	-4.3 dBc	Jamming	Frequency	5841950 kHz	PER
Jamming	Level	-4.1 dBc	Jamming	Frequency	5842000 kHz	PER
Jamming	Level	-2.6 dBc	Jamming	Frequency	5842050 kHz	PER
Jamming	Level	-3.3 dBc	Jamming	Frequency	5842100 kHz	PER

Jamming	Level	-4.3 dBc	Jamming	Frequency	5842150 kHz	PER
Jamming	Level	-4.5 dBc	Jamming	Frequency	5842200 kHz	PER
Jamming	Level	-4.5 dBc	Jamming	Frequency	5842250 kHz	PER
Jamming	Level	-3.3 dBc	Jamming	Frequency	5842300 kHz	PER
Jamming	Level	-1.8 dBc	Jamming	Frequency	5842350 kHz	PER
Jamming	Level	-1.7 dBc	Jamming	Frequency	5842400 kHz	PER
Jamming	Level	-2.3 dBc	Jamming	Frequency	5842450 kHz	PER
Jamming	Level	-2.4 dBc	Jamming	Frequency	5842500 kHz	PER
Jamming	Level	-0.3 dBc	Jamming	Frequency	5842550 kHz	PER
Jamming	Level	0.2 dBc	Jamming	Frequency	5842600 kHz	PER
Jamming	Level	-0.3 dBc	Jamming	Frequency	5842650 kHz	PER
Jamming	Level	-0.7 dBc	Jamming	Frequency	5842700 kHz	PER
Jamming	Level	-0.7 dBc	Jamming	Frequency	5842750 kHz	PER
Jamming	Level	-0.7 dBc	Jamming	Frequency	5842800 kHz	PER
Jamming	Level	0.7 dBc	Jamming	Frequency	5842850 kHz	PER
Jamming	Level	0.9 dBc	Jamming	Frequency	5842900 kHz	PER
Jamming	Level	1.3 dBc	Jamming	Frequency	5842950 kHz	PER
Jamming	Level	1.9 dBc	Jamming	Frequency	5843000 kHz	PER
Jamming	Level	1.9 dBc	Jamming	Frequency	5843050 kHz	PER
Jamming	Level	1.8 dBc	Jamming	Frequency	5843100 kHz	PER
Jamming	Level	1 dBc	Jamming	Frequency	5843150 kHz	PER
Jamming	Level	0.4 dBc	Jamming	Frequency	5843200 kHz	PER
Jamming	Level	0 dBc	Jamming	Frequency	5843250 kHz	PER
Jamming	Level	1.3 dBc	Jamming	Frequency	5843300 kHz	PER
Jamming	Level	2.3 dBc	Jamming	Frequency	5843350 kHz	PER
Jamming	Level	1.7 dBc	Jamming	Frequency	5843400 kHz	PER
Jamming	Level	0.8 dBc	Jamming	Frequency	5843450 kHz	PER
Jamming	Level	0.8 dBc	Jamming	Frequency	5843500 kHz	PER
Jamming	Level	2.4 dBc	Jamming	Frequency	5843550 kHz	PER
Jamming	Level	3.4 dBc	Jamming	Frequency	5843600 kHz	PER
Jamming	Level	3 dBc	Jamming	Frequency	5843650 kHz	PER
Jamming	Level	1.8 dBc	Jamming	Frequency	5843700 kHz	PER
Jamming	Level	1.8 dBc	Jamming	Frequency	5843750 kHz	PER
Jamming	Level	2.1 dBc	Jamming	Frequency	5843800 kHz	PER
Jamming	Level	3.8 dBc	Jamming	Frequency	5843850 kHz	PER
Jamming	Level	4.1 dBc	Jamming	Frequency	5843900 kHz	PER
Jamming	Level	4.8 dBc	Jamming	Frequency	5843950 kHz	PER
Jamming	Level	5.4 dBc	Jamming	Frequency	5844000 kHz	PER
Jamming	Level	5 dBc	Jamming	Frequency	5844050 kHz	PER
Jamming	Level	5 dBc	Jamming	Frequency	5844100 kHz	PER
Jamming	Level	6 dBc	Jamming	Frequency	5844150 kHz	PER
Jamming	Level	4.2 dBc	Jamming	Frequency	5844200 kHz	PER
Jamming	Level	4.2 dBc	Jamming	Frequency	5844250 kHz	PER
Jamming	Level	5.4 dBc	Jamming	Frequency	5844300 kHz	PER
Jamming	Level	5.6 dBc	Jamming	Frequency	5844350 kHz	PER
Jamming	Level	5.3 dBc	Jamming	Frequency	5844400 kHz	PER
Jamming	Level	4.2 dBc	Jamming	Frequency	5844450 kHz	PER
Jamming	Level	4.5 dBc	Jamming	Frequency	5844500 kHz	PER
Jamming	Level	6.1 dBc	Jamming	Frequency	5844550 kHz	PER
Jamming	Level	6.3 dBc	Jamming	Frequency	5844600 kHz	PER
Jamming	Level	6.5 dBc	Jamming	Frequency	5844650 kHz	PER

Jamming	Level	5.7	dBc	Jamming	Frequency	5844700	kHz	PER
Jamming	Level	5.8	dBc	Jamming	Frequency	5844750	kHz	PER
Jamming	Level	6.1	dBc	Jamming	Frequency	5844800	kHz	PER
Jamming	Level	6.8	dBc	Jamming	Frequency	5844850	kHz	PER
Jamming	Level	7.7	dBc	Jamming	Frequency	5844900	kHz	PER
Jamming	Level	8.5	dBc	Jamming	Frequency	5844950	kHz	PER
Jamming	Level	9	dBc	Jamming	Frequency	5845000	kHz	PER

8
8
8
8
8
8
8
8
8
8
8
8
8
8
8
8
8
8
8
8
8
8
8
8
8
8
8
8
8
8
8
8
8
8
8
8
8
8
8
8
8
8
8
8
8
8
8
8
8
8
8
8
8
8
8
8
8

8
8
8

8
8
8

8
8
8

8
8
8

8
8
8
8
8
8
8
8
8
8
8
8
8
8
8
8
8
8
8
8
8
8
8
8
8
8
8
8
8
8
8
8
8
8
8
8
8
8
8
8
8
8
8
8
8
8
8
8
8
8
8
8
8
8
8
8
8

8
8
8

8
8
8
8
8
8
8

Jamming	Level	0.3	dBc	Jamming	Frequency	5769400	kHz	PER
Jamming	Level	-1.2	dBc	Jamming	Frequency	5769450	kHz	PER
Jamming	Level	-1.2	dBc	Jamming	Frequency	5769500	kHz	PER
Jamming	Level	-1	dBc	Jamming	Frequency	5769550	kHz	PER
Jamming	Level	-0.3	dBc	Jamming	Frequency	5769600	kHz	PER
Jamming	Level	-2.2	dBc	Jamming	Frequency	5769650	kHz	PER
Jamming	Level	-3	dBc	Jamming	Frequency	5769700	kHz	PER
Jamming	Level	-3.2	dBc	Jamming	Frequency	5769750	kHz	PER
Jamming	Level	-3.2	dBc	Jamming	Frequency	5769800	kHz	PER
Jamming	Level	-2.3	dBc	Jamming	Frequency	5769850	kHz	PER
Jamming	Level	-1.1	dBc	Jamming	Frequency	5769900	kHz	PER
Jamming	Level	-1.4	dBc	Jamming	Frequency	5769950	kHz	PER
Jamming	Level	-2.7	dBc	Jamming	Frequency	5770000	kHz	PER
Jamming	Level	-2.6	dBc	Jamming	Frequency	5770050	kHz	PER
Jamming	Level	-4	dBc	Jamming	Frequency	5770100	kHz	PER
Jamming	Level	-5.6	dBc	Jamming	Frequency	5770150	kHz	PER
Jamming	Level	-7.2	dBc	Jamming	Frequency	5770200	kHz	PER
Jamming	Level	-8.4	dBc	Jamming	Frequency	5770250	kHz	PER
Jamming	Level	-8.3	dBc	Jamming	Frequency	5770300	kHz	PER
Jamming	Level	-7.6	dBc	Jamming	Frequency	5770350	kHz	PER
Jamming	Level	-7.2	dBc	Jamming	Frequency	5770400	kHz	PER
Jamming	Level	-7.2	dBc	Jamming	Frequency	5770450	kHz	PER
Jamming	Level	-7.2	dBc	Jamming	Frequency	5770500	kHz	PER
Jamming	Level	-7	dBc	Jamming	Frequency	5770550	kHz	PER
Jamming	Level	-7.3	dBc	Jamming	Frequency	5770600	kHz	PER
Jamming	Level	-8.4	dBc	Jamming	Frequency	5770650	kHz	PER
Jamming	Level	-9.1	dBc	Jamming	Frequency	5770700	kHz	PER
Jamming	Level	-8.5	dBc	Jamming	Frequency	5770750	kHz	PER
Jamming	Level	-6.7	dBc	Jamming	Frequency	5770800	kHz	PER
Jamming	Level	-5.4	dBc	Jamming	Frequency	5770850	kHz	PER
Jamming	Level	-4.1	dBc	Jamming	Frequency	5770900	kHz	PER
Jamming	Level	-4.3	dBc	Jamming	Frequency	5770950	kHz	PER
Jamming	Level	-4.3	dBc	Jamming	Frequency	5771000	kHz	PER
Jamming	Level	-3.8	dBc	Jamming	Frequency	5771050	kHz	PER
Jamming	Level	-4.4	dBc	Jamming	Frequency	5771100	kHz	PER
Jamming	Level	-5.7	dBc	Jamming	Frequency	5771150	kHz	PER
Jamming	Level	-6	dBc	Jamming	Frequency	5771200	kHz	PER
Jamming	Level	-6	dBc	Jamming	Frequency	5771250	kHz	PER
Jamming	Level	-5.9	dBc	Jamming	Frequency	5771300	kHz	PER
Jamming	Level	-4.8	dBc	Jamming	Frequency	5771350	kHz	PER
Jamming	Level	-4.5	dBc	Jamming	Frequency	5771400	kHz	PER
Jamming	Level	-5.3	dBc	Jamming	Frequency	5771450	kHz	PER
Jamming	Level	-5.8	dBc	Jamming	Frequency	5771500	kHz	PER
Jamming	Level	-4.3	dBc	Jamming	Frequency	5771550	kHz	PER
Jamming	Level	-3.4	dBc	Jamming	Frequency	5771600	kHz	PER
Jamming	Level	-4.3	dBc	Jamming	Frequency	5771650	kHz	PER
Jamming	Level	-4.8	dBc	Jamming	Frequency	5771700	kHz	PER
Jamming	Level	-4.8	dBc	Jamming	Frequency	5771750	kHz	PER
Jamming	Level	-4.7	dBc	Jamming	Frequency	5771800	kHz	PER
Jamming	Level	-4.3	dBc	Jamming	Frequency	5771850	kHz	PER
Jamming	Level	-3.9	dBc	Jamming	Frequency	5771900	kHz	PER

Jamming	Level	-3.7 dBc	Jamming	Frequency	5771950 kHz	PER
Jamming	Level	-3.7 dBc	Jamming	Frequency	5772000 kHz	PER
Jamming	Level	-3.8 dBc	Jamming	Frequency	5772050 kHz	PER
Jamming	Level	-4.6 dBc	Jamming	Frequency	5772100 kHz	PER
Jamming	Level	-5 dBc	Jamming	Frequency	5772150 kHz	PER
Jamming	Level	-5.4 dBc	Jamming	Frequency	5772200 kHz	PER
Jamming	Level	-5.4 dBc	Jamming	Frequency	5772250 kHz	PER
Jamming	Level	-5.4 dBc	Jamming	Frequency	5772300 kHz	PER
Jamming	Level	-4.5 dBc	Jamming	Frequency	5772350 kHz	PER
Jamming	Level	-5 dBc	Jamming	Frequency	5772400 kHz	PER
Jamming	Level	-5.8 dBc	Jamming	Frequency	5772450 kHz	PER
Jamming	Level	-5.8 dBc	Jamming	Frequency	5772500 kHz	PER
Jamming	Level	-5.5 dBc	Jamming	Frequency	5772550 kHz	PER
Jamming	Level	-4.7 dBc	Jamming	Frequency	5772600 kHz	PER
Jamming	Level	-5.4 dBc	Jamming	Frequency	5772650 kHz	PER
Jamming	Level	-5.6 dBc	Jamming	Frequency	5772700 kHz	PER
Jamming	Level	-5.7 dBc	Jamming	Frequency	5772750 kHz	PER
Jamming	Level	-5.5 dBc	Jamming	Frequency	5772800 kHz	PER
Jamming	Level	-5.3 dBc	Jamming	Frequency	5772850 kHz	PER
Jamming	Level	-4.9 dBc	Jamming	Frequency	5772900 kHz	PER
Jamming	Level	-4.7 dBc	Jamming	Frequency	5772950 kHz	PER
Jamming	Level	-4.9 dBc	Jamming	Frequency	5773000 kHz	PER
Jamming	Level	-5 dBc	Jamming	Frequency	5773050 kHz	PER
Jamming	Level	-5.2 dBc	Jamming	Frequency	5773100 kHz	PER
Jamming	Level	-5.4 dBc	Jamming	Frequency	5773150 kHz	PER
Jamming	Level	-5.8 dBc	Jamming	Frequency	5773200 kHz	PER
Jamming	Level	-5.7 dBc	Jamming	Frequency	5773250 kHz	PER
Jamming	Level	-5.4 dBc	Jamming	Frequency	5773300 kHz	PER
Jamming	Level	-4.6 dBc	Jamming	Frequency	5773350 kHz	PER
Jamming	Level	-5.4 dBc	Jamming	Frequency	5773400 kHz	PER
Jamming	Level	-6.2 dBc	Jamming	Frequency	5773450 kHz	PER
Jamming	Level	-6.2 dBc	Jamming	Frequency	5773500 kHz	PER
Jamming	Level	-5.4 dBc	Jamming	Frequency	5773550 kHz	PER
Jamming	Level	-4.7 dBc	Jamming	Frequency	5773600 kHz	PER
Jamming	Level	-5.2 dBc	Jamming	Frequency	5773650 kHz	PER
Jamming	Level	-5.7 dBc	Jamming	Frequency	5773700 kHz	PER
Jamming	Level	-5.7 dBc	Jamming	Frequency	5773750 kHz	PER
Jamming	Level	-5.8 dBc	Jamming	Frequency	5773800 kHz	PER
Jamming	Level	-5.5 dBc	Jamming	Frequency	5773850 kHz	PER
Jamming	Level	-5.4 dBc	Jamming	Frequency	5773900 kHz	PER
Jamming	Level	-5.3 dBc	Jamming	Frequency	5773950 kHz	PER
Jamming	Level	-5 dBc	Jamming	Frequency	5774000 kHz	PER
Jamming	Level	-5.4 dBc	Jamming	Frequency	5774050 kHz	PER
Jamming	Level	-5.7 dBc	Jamming	Frequency	5774100 kHz	PER
Jamming	Level	-5.8 dBc	Jamming	Frequency	5774150 kHz	PER
Jamming	Level	-6 dBc	Jamming	Frequency	5774200 kHz	PER
Jamming	Level	-6.1 dBc	Jamming	Frequency	5774250 kHz	PER
Jamming	Level	-6.1 dBc	Jamming	Frequency	5774300 kHz	PER
Jamming	Level	-5.3 dBc	Jamming	Frequency	5774350 kHz	PER
Jamming	Level	-5.6 dBc	Jamming	Frequency	5774400 kHz	PER
Jamming	Level	-6 dBc	Jamming	Frequency	5774450 kHz	PER

Jamming	Level	-6 dBc	Jamming	Frequency	5774500 kHz	PER
Jamming	Level	-6 dBc	Jamming	Frequency	5774550 kHz	PER
Jamming	Level	-5.7 dBc	Jamming	Frequency	5774600 kHz	PER
Jamming	Level	-6.2 dBc	Jamming	Frequency	5774650 kHz	PER
Jamming	Level	-6.2 dBc	Jamming	Frequency	5774700 kHz	PER
Jamming	Level	-6.1 dBc	Jamming	Frequency	5774750 kHz	PER
Jamming	Level	-6.1 dBc	Jamming	Frequency	5774800 kHz	PER
Jamming	Level	-5.8 dBc	Jamming	Frequency	5774850 kHz	PER
Jamming	Level	-5.4 dBc	Jamming	Frequency	5774900 kHz	PER
Jamming	Level	-5.2 dBc	Jamming	Frequency	5774950 kHz	PER
Jamming	Level	-4.8 dBc	Jamming	Frequency	5775000 kHz	PER
Jamming	Level	-4.9 dBc	Jamming	Frequency	5775050 kHz	PER
Jamming	Level	-5.7 dBc	Jamming	Frequency	5775100 kHz	PER
Jamming	Level	-6.3 dBc	Jamming	Frequency	5775150 kHz	PER
Jamming	Level	-6.6 dBc	Jamming	Frequency	5775200 kHz	PER
Jamming	Level	-7.8 dBc	Jamming	Frequency	5775250 kHz	PER
Jamming	Level	-9.5 dBc	Jamming	Frequency	5775300 kHz	PER
Jamming	Level	-8.8 dBc	Jamming	Frequency	5775350 kHz	PER
Jamming	Level	-8.5 dBc	Jamming	Frequency	5775400 kHz	PER
Jamming	Level	-8.6 dBc	Jamming	Frequency	5775450 kHz	PER
Jamming	Level	-9.3 dBc	Jamming	Frequency	5775500 kHz	PER
Jamming	Level	-8.7 dBc	Jamming	Frequency	5775550 kHz	PER
Jamming	Level	-9.4 dBc	Jamming	Frequency	5775600 kHz	PER
Jamming	Level	-11.6 dBc	Jamming	Frequency	5775650 kHz	PER
Jamming	Level	-11.5 dBc	Jamming	Frequency	5775700 kHz	PER
Jamming	Level	-8.7 dBc	Jamming	Frequency	5775750 kHz	PER
Jamming	Level	-8.7 dBc	Jamming	Frequency	5775800 kHz	PER
Jamming	Level	-9.2 dBc	Jamming	Frequency	5775850 kHz	PER
Jamming	Level	-8.7 dBc	Jamming	Frequency	5775900 kHz	PER
Jamming	Level	-6.6 dBc	Jamming	Frequency	5775950 kHz	PER
Jamming	Level	-6.4 dBc	Jamming	Frequency	5776000 kHz	PER
Jamming	Level	-7.5 dBc	Jamming	Frequency	5776050 kHz	PER
Jamming	Level	-9.7 dBc	Jamming	Frequency	5776100 kHz	PER
Jamming	Level	-8.1 dBc	Jamming	Frequency	5776150 kHz	PER
Jamming	Level	-8.7 dBc	Jamming	Frequency	5776200 kHz	PER
Jamming	Level	-11 dBc	Jamming	Frequency	5776250 kHz	PER
Jamming	Level	-11.7 dBc	Jamming	Frequency	5776300 kHz	PER
Jamming	Level	-10.1 dBc	Jamming	Frequency	5776350 kHz	PER
Jamming	Level	-8.5 dBc	Jamming	Frequency	5776400 kHz	PER
Jamming	Level	-8.6 dBc	Jamming	Frequency	5776450 kHz	PER
Jamming	Level	-8.8 dBc	Jamming	Frequency	5776500 kHz	PER
Jamming	Level	-8.8 dBc	Jamming	Frequency	5776550 kHz	PER
Jamming	Level	-9 dBc	Jamming	Frequency	5776600 kHz	PER
Jamming	Level	-9.2 dBc	Jamming	Frequency	5776650 kHz	PER
Jamming	Level	-7.9 dBc	Jamming	Frequency	5776700 kHz	PER
Jamming	Level	-6.7 dBc	Jamming	Frequency	5776750 kHz	PER
Jamming	Level	-6.3 dBc	Jamming	Frequency	5776800 kHz	PER
Jamming	Level	-5.6 dBc	Jamming	Frequency	5776850 kHz	PER
Jamming	Level	-4.9 dBc	Jamming	Frequency	5776900 kHz	PER
Jamming	Level	-4.6 dBc	Jamming	Frequency	5776950 kHz	PER
Jamming	Level	-4.8 dBc	Jamming	Frequency	5777000 kHz	PER

Jamming	Level	-5	dBc	Jamming	Frequency	5777050	kHz	PER
Jamming	Level	-5.5	dBc	Jamming	Frequency	5777100	kHz	PER
Jamming	Level	-5.9	dBc	Jamming	Frequency	5777150	kHz	PER
Jamming	Level	-6.3	dBc	Jamming	Frequency	5777200	kHz	PER
Jamming	Level	-6.2	dBc	Jamming	Frequency	5777250	kHz	PER
Jamming	Level	-6.2	dBc	Jamming	Frequency	5777300	kHz	PER
Jamming	Level	-5.7	dBc	Jamming	Frequency	5777350	kHz	PER
Jamming	Level	-5.7	dBc	Jamming	Frequency	5777400	kHz	PER
Jamming	Level	-6.3	dBc	Jamming	Frequency	5777450	kHz	PER
Jamming	Level	-6.3	dBc	Jamming	Frequency	5777500	kHz	PER
Jamming	Level	-5.9	dBc	Jamming	Frequency	5777550	kHz	PER
Jamming	Level	-5.7	dBc	Jamming	Frequency	5777600	kHz	PER
Jamming	Level	-6.2	dBc	Jamming	Frequency	5777650	kHz	PER
Jamming	Level	-6.3	dBc	Jamming	Frequency	5777700	kHz	PER
Jamming	Level	-6.3	dBc	Jamming	Frequency	5777750	kHz	PER
Jamming	Level	-6.3	dBc	Jamming	Frequency	5777800	kHz	PER
Jamming	Level	-6.2	dBc	Jamming	Frequency	5777850	kHz	PER
Jamming	Level	-5.8	dBc	Jamming	Frequency	5777900	kHz	PER
Jamming	Level	-5.6	dBc	Jamming	Frequency	5777950	kHz	PER
Jamming	Level	-5.6	dBc	Jamming	Frequency	5778000	kHz	PER
Jamming	Level	-5.6	dBc	Jamming	Frequency	5778050	kHz	PER
Jamming	Level	-5.8	dBc	Jamming	Frequency	5778100	kHz	PER
Jamming	Level	-6.1	dBc	Jamming	Frequency	5778150	kHz	PER
Jamming	Level	-6.3	dBc	Jamming	Frequency	5778200	kHz	PER
Jamming	Level	-6.4	dBc	Jamming	Frequency	5778250	kHz	PER
Jamming	Level	-6	dBc	Jamming	Frequency	5778300	kHz	PER
Jamming	Level	-5.3	dBc	Jamming	Frequency	5778350	kHz	PER
Jamming	Level	-6	dBc	Jamming	Frequency	5778400	kHz	PER
Jamming	Level	-6.8	dBc	Jamming	Frequency	5778450	kHz	PER
Jamming	Level	-7.1	dBc	Jamming	Frequency	5778500	kHz	PER
Jamming	Level	-6.6	dBc	Jamming	Frequency	5778550	kHz	PER
Jamming	Level	-5.6	dBc	Jamming	Frequency	5778600	kHz	PER
Jamming	Level	-5.8	dBc	Jamming	Frequency	5778650	kHz	PER
Jamming	Level	-6.4	dBc	Jamming	Frequency	5778700	kHz	PER
Jamming	Level	-6.4	dBc	Jamming	Frequency	5778750	kHz	PER
Jamming	Level	-6.4	dBc	Jamming	Frequency	5778800	kHz	PER
Jamming	Level	-5.9	dBc	Jamming	Frequency	5778850	kHz	PER
Jamming	Level	-5.8	dBc	Jamming	Frequency	5778900	kHz	PER
Jamming	Level	-5.4	dBc	Jamming	Frequency	5778950	kHz	PER
Jamming	Level	-5.4	dBc	Jamming	Frequency	5779000	kHz	PER
Jamming	Level	-5.4	dBc	Jamming	Frequency	5779050	kHz	PER
Jamming	Level	-5.7	dBc	Jamming	Frequency	5779100	kHz	PER
Jamming	Level	-6.1	dBc	Jamming	Frequency	5779150	kHz	PER
Jamming	Level	-6.6	dBc	Jamming	Frequency	5779200	kHz	PER
Jamming	Level	-6.8	dBc	Jamming	Frequency	5779250	kHz	PER
Jamming	Level	-6.1	dBc	Jamming	Frequency	5779300	kHz	PER
Jamming	Level	-5.8	dBc	Jamming	Frequency	5779350	kHz	PER
Jamming	Level	-5.9	dBc	Jamming	Frequency	5779400	kHz	PER
Jamming	Level	-7.2	dBc	Jamming	Frequency	5779450	kHz	PER
Jamming	Level	-7.2	dBc	Jamming	Frequency	5779500	kHz	PER
Jamming	Level	-6	dBc	Jamming	Frequency	5779550	kHz	PER

Jamming	Level	-5.4 dBc	Jamming	Frequency	5779600 kHz	PER
Jamming	Level	-6.1 dBc	Jamming	Frequency	5779650 kHz	PER
Jamming	Level	-6.3 dBc	Jamming	Frequency	5779700 kHz	PER
Jamming	Level	-6.3 dBc	Jamming	Frequency	5779750 kHz	PER
Jamming	Level	-5.9 dBc	Jamming	Frequency	5779800 kHz	PER
Jamming	Level	-5.3 dBc	Jamming	Frequency	5779850 kHz	PER
Jamming	Level	-5.1 dBc	Jamming	Frequency	5779900 kHz	PER
Jamming	Level	-4.4 dBc	Jamming	Frequency	5779950 kHz	PER
Jamming	Level	-4.4 dBc	Jamming	Frequency	5780000 kHz	PER
Jamming	Level	-4.9 dBc	Jamming	Frequency	5780050 kHz	PER
Jamming	Level	-4.9 dBc	Jamming	Frequency	5780100 kHz	PER
Jamming	Level	-5.2 dBc	Jamming	Frequency	5780150 kHz	PER
Jamming	Level	-5.6 dBc	Jamming	Frequency	5780200 kHz	PER
Jamming	Level	-5.6 dBc	Jamming	Frequency	5780250 kHz	PER
Jamming	Level	-5.1 dBc	Jamming	Frequency	5780300 kHz	PER
Jamming	Level	-3.7 dBc	Jamming	Frequency	5780350 kHz	PER
Jamming	Level	-4.3 dBc	Jamming	Frequency	5780400 kHz	PER
Jamming	Level	-5.9 dBc	Jamming	Frequency	5780450 kHz	PER
Jamming	Level	-5.7 dBc	Jamming	Frequency	5780500 kHz	PER
Jamming	Level	-4.7 dBc	Jamming	Frequency	5780550 kHz	PER
Jamming	Level	-4.3 dBc	Jamming	Frequency	5780600 kHz	PER
Jamming	Level	-5.5 dBc	Jamming	Frequency	5780650 kHz	PER
Jamming	Level	-6 dBc	Jamming	Frequency	5780700 kHz	PER
Jamming	Level	-6.1 dBc	Jamming	Frequency	5780750 kHz	PER
Jamming	Level	-6.1 dBc	Jamming	Frequency	5780800 kHz	PER
Jamming	Level	-5.2 dBc	Jamming	Frequency	5780850 kHz	PER
Jamming	Level	-3.8 dBc	Jamming	Frequency	5780900 kHz	PER
Jamming	Level	-4.4 dBc	Jamming	Frequency	5780950 kHz	PER
Jamming	Level	-4.6 dBc	Jamming	Frequency	5781000 kHz	PER
Jamming	Level	-4.6 dBc	Jamming	Frequency	5781050 kHz	PER
Jamming	Level	-5.8 dBc	Jamming	Frequency	5781100 kHz	PER
Jamming	Level	-7.1 dBc	Jamming	Frequency	5781150 kHz	PER
Jamming	Level	-8.5 dBc	Jamming	Frequency	5781200 kHz	PER
Jamming	Level	-9.8 dBc	Jamming	Frequency	5781250 kHz	PER
Jamming	Level	-9.5 dBc	Jamming	Frequency	5781300 kHz	PER
Jamming	Level	-8.6 dBc	Jamming	Frequency	5781350 kHz	PER
Jamming	Level	-8.1 dBc	Jamming	Frequency	5781400 kHz	PER
Jamming	Level	-8 dBc	Jamming	Frequency	5781450 kHz	PER
Jamming	Level	-7.9 dBc	Jamming	Frequency	5781500 kHz	PER
Jamming	Level	-7.8 dBc	Jamming	Frequency	5781550 kHz	PER
Jamming	Level	-8.2 dBc	Jamming	Frequency	5781600 kHz	PER
Jamming	Level	-8.9 dBc	Jamming	Frequency	5781650 kHz	PER
Jamming	Level	-9.3 dBc	Jamming	Frequency	5781700 kHz	PER
Jamming	Level	-8.7 dBc	Jamming	Frequency	5781750 kHz	PER
Jamming	Level	-6.9 dBc	Jamming	Frequency	5781800 kHz	PER
Jamming	Level	-5.3 dBc	Jamming	Frequency	5781850 kHz	PER
Jamming	Level	-3.6 dBc	Jamming	Frequency	5781900 kHz	PER
Jamming	Level	-3.9 dBc	Jamming	Frequency	5781950 kHz	PER
Jamming	Level	-3.8 dBc	Jamming	Frequency	5782000 kHz	PER
Jamming	Level	-2.2 dBc	Jamming	Frequency	5782050 kHz	PER
Jamming	Level	-3.1 dBc	Jamming	Frequency	5782100 kHz	PER

Jamming	Level	-4.2 dBc	Jamming	Frequency	5782150 kHz	PER
Jamming	Level	-4.4 dBc	Jamming	Frequency	5782200 kHz	PER
Jamming	Level	-4.3 dBc	Jamming	Frequency	5782250 kHz	PER
Jamming	Level	-3.6 dBc	Jamming	Frequency	5782300 kHz	PER
Jamming	Level	-1.4 dBc	Jamming	Frequency	5782350 kHz	PER
Jamming	Level	-1.4 dBc	Jamming	Frequency	5782400 kHz	PER
Jamming	Level	-2.4 dBc	Jamming	Frequency	5782450 kHz	PER
Jamming	Level	-2.3 dBc	Jamming	Frequency	5782500 kHz	PER
Jamming	Level	-0.3 dBc	Jamming	Frequency	5782550 kHz	PER
Jamming	Level	0.4 dBc	Jamming	Frequency	5782600 kHz	PER
Jamming	Level	-0.2 dBc	Jamming	Frequency	5782650 kHz	PER
Jamming	Level	-0.7 dBc	Jamming	Frequency	5782700 kHz	PER
Jamming	Level	-0.6 dBc	Jamming	Frequency	5782750 kHz	PER
Jamming	Level	-0.6 dBc	Jamming	Frequency	5782800 kHz	PER
Jamming	Level	1 dBc	Jamming	Frequency	5782850 kHz	PER
Jamming	Level	1.3 dBc	Jamming	Frequency	5782900 kHz	PER
Jamming	Level	1.7 dBc	Jamming	Frequency	5782950 kHz	PER
Jamming	Level	2.2 dBc	Jamming	Frequency	5783000 kHz	PER
Jamming	Level	1.9 dBc	Jamming	Frequency	5783050 kHz	PER
Jamming	Level	1.9 dBc	Jamming	Frequency	5783100 kHz	PER
Jamming	Level	1 dBc	Jamming	Frequency	5783150 kHz	PER
Jamming	Level	0.3 dBc	Jamming	Frequency	5783200 kHz	PER
Jamming	Level	0.4 dBc	Jamming	Frequency	5783250 kHz	PER
Jamming	Level	1 dBc	Jamming	Frequency	5783300 kHz	PER
Jamming	Level	2.1 dBc	Jamming	Frequency	5783350 kHz	PER
Jamming	Level	2 dBc	Jamming	Frequency	5783400 kHz	PER
Jamming	Level	1.1 dBc	Jamming	Frequency	5783450 kHz	PER
Jamming	Level	1.1 dBc	Jamming	Frequency	5783500 kHz	PER
Jamming	Level	2.6 dBc	Jamming	Frequency	5783550 kHz	PER
Jamming	Level	2.9 dBc	Jamming	Frequency	5783600 kHz	PER
Jamming	Level	2.3 dBc	Jamming	Frequency	5783650 kHz	PER
Jamming	Level	2 dBc	Jamming	Frequency	5783700 kHz	PER
Jamming	Level	2.1 dBc	Jamming	Frequency	5783750 kHz	PER
Jamming	Level	2.5 dBc	Jamming	Frequency	5783800 kHz	PER
Jamming	Level	4.1 dBc	Jamming	Frequency	5783850 kHz	PER
Jamming	Level	4.3 dBc	Jamming	Frequency	5783900 kHz	PER
Jamming	Level	5 dBc	Jamming	Frequency	5783950 kHz	PER
Jamming	Level	5 dBc	Jamming	Frequency	5784000 kHz	PER
Jamming	Level	5 dBc	Jamming	Frequency	5784050 kHz	PER
Jamming	Level	4.9 dBc	Jamming	Frequency	5784100 kHz	PER
Jamming	Level	4.8 dBc	Jamming	Frequency	5784150 kHz	PER
Jamming	Level	3.6 dBc	Jamming	Frequency	5784200 kHz	PER
Jamming	Level	4.3 dBc	Jamming	Frequency	5784250 kHz	PER
Jamming	Level	5.1 dBc	Jamming	Frequency	5784300 kHz	PER
Jamming	Level	5.3 dBc	Jamming	Frequency	5784350 kHz	PER
Jamming	Level	5.4 dBc	Jamming	Frequency	5784400 kHz	PER
Jamming	Level	4.3 dBc	Jamming	Frequency	5784450 kHz	PER
Jamming	Level	4.7 dBc	Jamming	Frequency	5784500 kHz	PER
Jamming	Level	5.8 dBc	Jamming	Frequency	5784550 kHz	PER
Jamming	Level	5.9 dBc	Jamming	Frequency	5784600 kHz	PER
Jamming	Level	6.1 dBc	Jamming	Frequency	5784650 kHz	PER

Jamming	Level	5.6 dBc	Jamming	Frequency	5784700 kHz		PER
Jamming	Level	5.2 dBc	Jamming	Frequency	5784750 kHz		PER
Jamming	Level	5.9 dBc	Jamming	Frequency	5784800 kHz		PER
Jamming	Level	7.8 dBc	Jamming	Frequency	5784850 kHz		PER
Jamming	Level	8.1 dBc	Jamming	Frequency	5784900 kHz		PER
Jamming	Level	8.5 dBc	Jamming	Frequency	5784950 kHz		PER
Jamming	Level	8.9 dBc	Jamming	Frequency	5785000 kHz		PER

8
8
8
8
8
8
8
8
8
8
8
8
8
8
8
8
8
8
8
8
8
8
8
8
8
8
8
8
8
8
8
8
8
8
8
8
8
8
8
8
8
8
8
8
8
8
8
8
8
8
8
8
8
8
8
8
8

8
8
8

8
8
8

8
8
8

8
8
8

8
8
8
8
8
8
8
8
8
8
8
8
8
8
8
8
8
8
8
8
8
8
8
8
8
8
8
8
8
8
8
8
8
8
8
8
8
8
8
8
8
8
8
8
8
8
8
8
8
8
8
8
8
8
8
8
8

8
8
8

8
8
8
8
8
8
8

Jamming	Level	-0.1 dBc	Jamming	Frequency	5729450 kHz	PER
Jamming	Level	-0.1 dBc	Jamming	Frequency	5729500 kHz	PER
Jamming	Level	0.4 dBc	Jamming	Frequency	5729550 kHz	PER
Jamming	Level	0.7 dBc	Jamming	Frequency	5729600 kHz	PER
Jamming	Level	-0.8 dBc	Jamming	Frequency	5729650 kHz	PER
Jamming	Level	-1.8 dBc	Jamming	Frequency	5729700 kHz	PER
Jamming	Level	-2.1 dBc	Jamming	Frequency	5729750 kHz	PER
Jamming	Level	-2.1 dBc	Jamming	Frequency	5729800 kHz	PER
Jamming	Level	-1 dBc	Jamming	Frequency	5729850 kHz	PER
Jamming	Level	-0.1 dBc	Jamming	Frequency	5729900 kHz	PER
Jamming	Level	-0.9 dBc	Jamming	Frequency	5729950 kHz	PER
Jamming	Level	-1.3 dBc	Jamming	Frequency	5730000 kHz	PER
Jamming	Level	-1.2 dBc	Jamming	Frequency	5730050 kHz	PER
Jamming	Level	-2.8 dBc	Jamming	Frequency	5730100 kHz	PER
Jamming	Level	-4.3 dBc	Jamming	Frequency	5730150 kHz	PER
Jamming	Level	-5.5 dBc	Jamming	Frequency	5730200 kHz	PER
Jamming	Level	-7.8 dBc	Jamming	Frequency	5730250 kHz	PER
Jamming	Level	-7.2 dBc	Jamming	Frequency	5730300 kHz	PER
Jamming	Level	-6.3 dBc	Jamming	Frequency	5730350 kHz	PER
Jamming	Level	-5.3 dBc	Jamming	Frequency	5730400 kHz	PER
Jamming	Level	-5.8 dBc	Jamming	Frequency	5730450 kHz	PER
Jamming	Level	-5.8 dBc	Jamming	Frequency	5730500 kHz	PER
Jamming	Level	-5.8 dBc	Jamming	Frequency	5730550 kHz	PER
Jamming	Level	-6.1 dBc	Jamming	Frequency	5730600 kHz	PER
Jamming	Level	-7.4 dBc	Jamming	Frequency	5730650 kHz	PER
Jamming	Level	-8.4 dBc	Jamming	Frequency	5730700 kHz	PER
Jamming	Level	-7.8 dBc	Jamming	Frequency	5730750 kHz	PER
Jamming	Level	-5.6 dBc	Jamming	Frequency	5730800 kHz	PER
Jamming	Level	-4.7 dBc	Jamming	Frequency	5730850 kHz	PER
Jamming	Level	-2.7 dBc	Jamming	Frequency	5730900 kHz	PER
Jamming	Level	-3 dBc	Jamming	Frequency	5730950 kHz	PER
Jamming	Level	-3 dBc	Jamming	Frequency	5731000 kHz	PER
Jamming	Level	-2.2 dBc	Jamming	Frequency	5731050 kHz	PER
Jamming	Level	-3.2 dBc	Jamming	Frequency	5731100 kHz	PER
Jamming	Level	-4.3 dBc	Jamming	Frequency	5731150 kHz	PER
Jamming	Level	-4.9 dBc	Jamming	Frequency	5731200 kHz	PER
Jamming	Level	-4.5 dBc	Jamming	Frequency	5731250 kHz	PER
Jamming	Level	-4.5 dBc	Jamming	Frequency	5731300 kHz	PER
Jamming	Level	-3.3 dBc	Jamming	Frequency	5731350 kHz	PER
Jamming	Level	-3 dBc	Jamming	Frequency	5731400 kHz	PER
Jamming	Level	-3.8 dBc	Jamming	Frequency	5731450 kHz	PER
Jamming	Level	-4.5 dBc	Jamming	Frequency	5731500 kHz	PER
Jamming	Level	-2.8 dBc	Jamming	Frequency	5731550 kHz	PER
Jamming	Level	-1.6 dBc	Jamming	Frequency	5731600 kHz	PER
Jamming	Level	-3 dBc	Jamming	Frequency	5731650 kHz	PER
Jamming	Level	-3.3 dBc	Jamming	Frequency	5731700 kHz	PER
Jamming	Level	-3.3 dBc	Jamming	Frequency	5731750 kHz	PER
Jamming	Level	-3.3 dBc	Jamming	Frequency	5731800 kHz	PER
Jamming	Level	-2.5 dBc	Jamming	Frequency	5731850 kHz	PER
Jamming	Level	-2.5 dBc	Jamming	Frequency	5731900 kHz	PER
Jamming	Level	-2.4 dBc	Jamming	Frequency	5731950 kHz	PER
Jamming	Level	-2.3 dBc	Jamming	Frequency	5732000 kHz	PER

Jamming	Level	-2.3 dBc	Jamming	Frequency	5732050 kHz	PER
Jamming	Level	-2.7 dBc	Jamming	Frequency	5732100 kHz	PER
Jamming	Level	-3.2 dBc	Jamming	Frequency	5732150 kHz	PER
Jamming	Level	-3.8 dBc	Jamming	Frequency	5732200 kHz	PER
Jamming	Level	-3.8 dBc	Jamming	Frequency	5732250 kHz	PER
Jamming	Level	-3.7 dBc	Jamming	Frequency	5732300 kHz	PER
Jamming	Level	-2.8 dBc	Jamming	Frequency	5732350 kHz	PER
Jamming	Level	-3.4 dBc	Jamming	Frequency	5732400 kHz	PER
Jamming	Level	-4 dBc	Jamming	Frequency	5732450 kHz	PER
Jamming	Level	-4.5 dBc	Jamming	Frequency	5732500 kHz	PER
Jamming	Level	-3.8 dBc	Jamming	Frequency	5732550 kHz	PER
Jamming	Level	-3.3 dBc	Jamming	Frequency	5732600 kHz	PER
Jamming	Level	-4.1 dBc	Jamming	Frequency	5732650 kHz	PER
Jamming	Level	-4.2 dBc	Jamming	Frequency	5732700 kHz	PER
Jamming	Level	-4.2 dBc	Jamming	Frequency	5732750 kHz	PER
Jamming	Level	-4 dBc	Jamming	Frequency	5732800 kHz	PER
Jamming	Level	-3.7 dBc	Jamming	Frequency	5732850 kHz	PER
Jamming	Level	-3.3 dBc	Jamming	Frequency	5732900 kHz	PER
Jamming	Level	-3.3 dBc	Jamming	Frequency	5732950 kHz	PER
Jamming	Level	-3.3 dBc	Jamming	Frequency	5733000 kHz	PER
Jamming	Level	-3.4 dBc	Jamming	Frequency	5733050 kHz	PER
Jamming	Level	-3.5 dBc	Jamming	Frequency	5733100 kHz	PER
Jamming	Level	-3.9 dBc	Jamming	Frequency	5733150 kHz	PER
Jamming	Level	-4.3 dBc	Jamming	Frequency	5733200 kHz	PER
Jamming	Level	-4.3 dBc	Jamming	Frequency	5733250 kHz	PER
Jamming	Level	-4.1 dBc	Jamming	Frequency	5733300 kHz	PER
Jamming	Level	-3.2 dBc	Jamming	Frequency	5733350 kHz	PER
Jamming	Level	-3.8 dBc	Jamming	Frequency	5733400 kHz	PER
Jamming	Level	-4.7 dBc	Jamming	Frequency	5733450 kHz	PER
Jamming	Level	-4.8 dBc	Jamming	Frequency	5733500 kHz	PER
Jamming	Level	-3.9 dBc	Jamming	Frequency	5733550 kHz	PER
Jamming	Level	-3.1 dBc	Jamming	Frequency	5733600 kHz	PER
Jamming	Level	-3.7 dBc	Jamming	Frequency	5733650 kHz	PER
Jamming	Level	-4.4 dBc	Jamming	Frequency	5733700 kHz	PER
Jamming	Level	-4.3 dBc	Jamming	Frequency	5733750 kHz	PER
Jamming	Level	-4.3 dBc	Jamming	Frequency	5733800 kHz	PER
Jamming	Level	-4.1 dBc	Jamming	Frequency	5733850 kHz	PER
Jamming	Level	-3.8 dBc	Jamming	Frequency	5733900 kHz	PER
Jamming	Level	-3.7 dBc	Jamming	Frequency	5733950 kHz	PER
Jamming	Level	-3.7 dBc	Jamming	Frequency	5734000 kHz	PER
Jamming	Level	-3.8 dBc	Jamming	Frequency	5734050 kHz	PER
Jamming	Level	-4.1 dBc	Jamming	Frequency	5734100 kHz	PER
Jamming	Level	-4.5 dBc	Jamming	Frequency	5734150 kHz	PER
Jamming	Level	-4.6 dBc	Jamming	Frequency	5734200 kHz	PER
Jamming	Level	-4.6 dBc	Jamming	Frequency	5734250 kHz	PER
Jamming	Level	-4.6 dBc	Jamming	Frequency	5734300 kHz	PER
Jamming	Level	-3.8 dBc	Jamming	Frequency	5734350 kHz	PER
Jamming	Level	-4 dBc	Jamming	Frequency	5734400 kHz	PER
Jamming	Level	-4.6 dBc	Jamming	Frequency	5734450 kHz	PER
Jamming	Level	-4.5 dBc	Jamming	Frequency	5734500 kHz	PER
Jamming	Level	-4.5 dBc	Jamming	Frequency	5734550 kHz	PER
Jamming	Level	-4 dBc	Jamming	Frequency	5734600 kHz	PER

Jamming	Level	-4.4 dBc	Jamming	Frequency	5734650 kHz	PER
Jamming	Level	-4.8 dBc	Jamming	Frequency	5734700 kHz	PER
Jamming	Level	-4.8 dBc	Jamming	Frequency	5734750 kHz	PER
Jamming	Level	-4.7 dBc	Jamming	Frequency	5734800 kHz	PER
Jamming	Level	-4.5 dBc	Jamming	Frequency	5734850 kHz	PER
Jamming	Level	-4 dBc	Jamming	Frequency	5734900 kHz	PER
Jamming	Level	-3.7 dBc	Jamming	Frequency	5734950 kHz	PER
Jamming	Level	-3.3 dBc	Jamming	Frequency	5735000 kHz	PER
Jamming	Level	-3.3 dBc	Jamming	Frequency	5735050 kHz	PER
Jamming	Level	-4.4 dBc	Jamming	Frequency	5735100 kHz	PER
Jamming	Level	-4.7 dBc	Jamming	Frequency	5735150 kHz	PER
Jamming	Level	-5.6 dBc	Jamming	Frequency	5735200 kHz	PER
Jamming	Level	-6.3 dBc	Jamming	Frequency	5735250 kHz	PER
Jamming	Level	-8 dBc	Jamming	Frequency	5735300 kHz	PER
Jamming	Level	-7.5 dBc	Jamming	Frequency	5735350 kHz	PER
Jamming	Level	-7.5 dBc	Jamming	Frequency	5735400 kHz	PER
Jamming	Level	-7.5 dBc	Jamming	Frequency	5735450 kHz	PER
Jamming	Level	-8 dBc	Jamming	Frequency	5735500 kHz	PER
Jamming	Level	-7.2 dBc	Jamming	Frequency	5735550 kHz	PER
Jamming	Level	-8.2 dBc	Jamming	Frequency	5735600 kHz	PER
Jamming	Level	-10.7 dBc	Jamming	Frequency	5735650 kHz	PER
Jamming	Level	-10.4 dBc	Jamming	Frequency	5735700 kHz	PER
Jamming	Level	-7.4 dBc	Jamming	Frequency	5735750 kHz	PER
Jamming	Level	-7.3 dBc	Jamming	Frequency	5735800 kHz	PER
Jamming	Level	-7.4 dBc	Jamming	Frequency	5735850 kHz	PER
Jamming	Level	-7.4 dBc	Jamming	Frequency	5735900 kHz	PER
Jamming	Level	-5.1 dBc	Jamming	Frequency	5735950 kHz	PER
Jamming	Level	-5.1 dBc	Jamming	Frequency	5736000 kHz	PER
Jamming	Level	-5.7 dBc	Jamming	Frequency	5736050 kHz	PER
Jamming	Level	-8.2 dBc	Jamming	Frequency	5736100 kHz	PER
Jamming	Level	-7.1 dBc	Jamming	Frequency	5736150 kHz	PER
Jamming	Level	-7.5 dBc	Jamming	Frequency	5736200 kHz	PER
Jamming	Level	-9.6 dBc	Jamming	Frequency	5736250 kHz	PER
Jamming	Level	-10.8 dBc	Jamming	Frequency	5736300 kHz	PER
Jamming	Level	-8.6 dBc	Jamming	Frequency	5736350 kHz	PER
Jamming	Level	-7.3 dBc	Jamming	Frequency	5736400 kHz	PER
Jamming	Level	-7.3 dBc	Jamming	Frequency	5736450 kHz	PER
Jamming	Level	-7.3 dBc	Jamming	Frequency	5736500 kHz	PER
Jamming	Level	-6.8 dBc	Jamming	Frequency	5736550 kHz	PER
Jamming	Level	-7.7 dBc	Jamming	Frequency	5736600 kHz	PER
Jamming	Level	-8 dBc	Jamming	Frequency	5736650 kHz	PER
Jamming	Level	-6.3 dBc	Jamming	Frequency	5736700 kHz	PER
Jamming	Level	-5.7 dBc	Jamming	Frequency	5736750 kHz	PER
Jamming	Level	-4.7 dBc	Jamming	Frequency	5736800 kHz	PER
Jamming	Level	-4.5 dBc	Jamming	Frequency	5736850 kHz	PER
Jamming	Level	-3.5 dBc	Jamming	Frequency	5736900 kHz	PER
Jamming	Level	-3.3 dBc	Jamming	Frequency	5736950 kHz	PER
Jamming	Level	-3.6 dBc	Jamming	Frequency	5737000 kHz	PER
Jamming	Level	-3.8 dBc	Jamming	Frequency	5737050 kHz	PER
Jamming	Level	-4.4 dBc	Jamming	Frequency	5737100 kHz	PER
Jamming	Level	-4.6 dBc	Jamming	Frequency	5737150 kHz	PER
Jamming	Level	-5 dBc	Jamming	Frequency	5737200 kHz	PER

Jamming	Level	-5 dBc	Jamming	Frequency	5737250 kHz	PER
Jamming	Level	-4.9 dBc	Jamming	Frequency	5737300 kHz	PER
Jamming	Level	-4.3 dBc	Jamming	Frequency	5737350 kHz	PER
Jamming	Level	-4.3 dBc	Jamming	Frequency	5737400 kHz	PER
Jamming	Level	-4.8 dBc	Jamming	Frequency	5737450 kHz	PER
Jamming	Level	-4.8 dBc	Jamming	Frequency	5737500 kHz	PER
Jamming	Level	-4.4 dBc	Jamming	Frequency	5737550 kHz	PER
Jamming	Level	-4.3 dBc	Jamming	Frequency	5737600 kHz	PER
Jamming	Level	-4.7 dBc	Jamming	Frequency	5737650 kHz	PER
Jamming	Level	-5 dBc	Jamming	Frequency	5737700 kHz	PER
Jamming	Level	-4.8 dBc	Jamming	Frequency	5737750 kHz	PER
Jamming	Level	-4.8 dBc	Jamming	Frequency	5737800 kHz	PER
Jamming	Level	-4.6 dBc	Jamming	Frequency	5737850 kHz	PER
Jamming	Level	-4.3 dBc	Jamming	Frequency	5737900 kHz	PER
Jamming	Level	-3.8 dBc	Jamming	Frequency	5737950 kHz	PER
Jamming	Level	-4 dBc	Jamming	Frequency	5738000 kHz	PER
Jamming	Level	-4.2 dBc	Jamming	Frequency	5738050 kHz	PER
Jamming	Level	-4.3 dBc	Jamming	Frequency	5738100 kHz	PER
Jamming	Level	-4.6 dBc	Jamming	Frequency	5738150 kHz	PER
Jamming	Level	-4.8 dBc	Jamming	Frequency	5738200 kHz	PER
Jamming	Level	-5.2 dBc	Jamming	Frequency	5738250 kHz	PER
Jamming	Level	-4.8 dBc	Jamming	Frequency	5738300 kHz	PER
Jamming	Level	-3.8 dBc	Jamming	Frequency	5738350 kHz	PER
Jamming	Level	-4.5 dBc	Jamming	Frequency	5738400 kHz	PER
Jamming	Level	-5.5 dBc	Jamming	Frequency	5738450 kHz	PER
Jamming	Level	-5.8 dBc	Jamming	Frequency	5738500 kHz	PER
Jamming	Level	-5.1 dBc	Jamming	Frequency	5738550 kHz	PER
Jamming	Level	-4.3 dBc	Jamming	Frequency	5738600 kHz	PER
Jamming	Level	-4.6 dBc	Jamming	Frequency	5738650 kHz	PER
Jamming	Level	-5.2 dBc	Jamming	Frequency	5738700 kHz	PER
Jamming	Level	-5.2 dBc	Jamming	Frequency	5738750 kHz	PER
Jamming	Level	-5.2 dBc	Jamming	Frequency	5738800 kHz	PER
Jamming	Level	-4.7 dBc	Jamming	Frequency	5738850 kHz	PER
Jamming	Level	-4.3 dBc	Jamming	Frequency	5738900 kHz	PER
Jamming	Level	-3.8 dBc	Jamming	Frequency	5738950 kHz	PER
Jamming	Level	-4.3 dBc	Jamming	Frequency	5739000 kHz	PER
Jamming	Level	-4.3 dBc	Jamming	Frequency	5739050 kHz	PER
Jamming	Level	-4.3 dBc	Jamming	Frequency	5739100 kHz	PER
Jamming	Level	-4.7 dBc	Jamming	Frequency	5739150 kHz	PER
Jamming	Level	-5.3 dBc	Jamming	Frequency	5739200 kHz	PER
Jamming	Level	-5.4 dBc	Jamming	Frequency	5739250 kHz	PER
Jamming	Level	-4.9 dBc	Jamming	Frequency	5739300 kHz	PER
Jamming	Level	-4.4 dBc	Jamming	Frequency	5739350 kHz	PER
Jamming	Level	-4.8 dBc	Jamming	Frequency	5739400 kHz	PER
Jamming	Level	-6 dBc	Jamming	Frequency	5739450 kHz	PER
Jamming	Level	-6.2 dBc	Jamming	Frequency	5739500 kHz	PER
Jamming	Level	-4.6 dBc	Jamming	Frequency	5739550 kHz	PER
Jamming	Level	-4.2 dBc	Jamming	Frequency	5739600 kHz	PER
Jamming	Level	-4.8 dBc	Jamming	Frequency	5739650 kHz	PER
Jamming	Level	-5.4 dBc	Jamming	Frequency	5739700 kHz	PER
Jamming	Level	-5.4 dBc	Jamming	Frequency	5739750 kHz	PER
Jamming	Level	-4.7 dBc	Jamming	Frequency	5739800 kHz	PER

Jamming	Level	-4 dBc	Jamming	Frequency	5739850 kHz	PER
Jamming	Level	-3.4 dBc	Jamming	Frequency	5739900 kHz	PER
Jamming	Level	-3.1 dBc	Jamming	Frequency	5739950 kHz	PER
Jamming	Level	-3.1 dBc	Jamming	Frequency	5740000 kHz	PER
Jamming	Level	-3.3 dBc	Jamming	Frequency	5740050 kHz	PER
Jamming	Level	-3.8 dBc	Jamming	Frequency	5740100 kHz	PER
Jamming	Level	-3.8 dBc	Jamming	Frequency	5740150 kHz	PER
Jamming	Level	-4 dBc	Jamming	Frequency	5740200 kHz	PER
Jamming	Level	-4.2 dBc	Jamming	Frequency	5740250 kHz	PER
Jamming	Level	-3.8 dBc	Jamming	Frequency	5740300 kHz	PER
Jamming	Level	-2.3 dBc	Jamming	Frequency	5740350 kHz	PER
Jamming	Level	-3.4 dBc	Jamming	Frequency	5740400 kHz	PER
Jamming	Level	-4.6 dBc	Jamming	Frequency	5740450 kHz	PER
Jamming	Level	-4.4 dBc	Jamming	Frequency	5740500 kHz	PER
Jamming	Level	-3.3 dBc	Jamming	Frequency	5740550 kHz	PER
Jamming	Level	-3 dBc	Jamming	Frequency	5740600 kHz	PER
Jamming	Level	-4.1 dBc	Jamming	Frequency	5740650 kHz	PER
Jamming	Level	-5.3 dBc	Jamming	Frequency	5740700 kHz	PER
Jamming	Level	-5.1 dBc	Jamming	Frequency	5740750 kHz	PER
Jamming	Level	-5.1 dBc	Jamming	Frequency	5740800 kHz	PER
Jamming	Level	-3.8 dBc	Jamming	Frequency	5740850 kHz	PER
Jamming	Level	-2.8 dBc	Jamming	Frequency	5740900 kHz	PER
Jamming	Level	-3.1 dBc	Jamming	Frequency	5740950 kHz	PER
Jamming	Level	-3.3 dBc	Jamming	Frequency	5741000 kHz	PER
Jamming	Level	-3.2 dBc	Jamming	Frequency	5741050 kHz	PER
Jamming	Level	-4.5 dBc	Jamming	Frequency	5741100 kHz	PER
Jamming	Level	-5.9 dBc	Jamming	Frequency	5741150 kHz	PER
Jamming	Level	-7.1 dBc	Jamming	Frequency	5741200 kHz	PER
Jamming	Level	-8.9 dBc	Jamming	Frequency	5741250 kHz	PER
Jamming	Level	-8.4 dBc	Jamming	Frequency	5741300 kHz	PER
Jamming	Level	-7.3 dBc	Jamming	Frequency	5741350 kHz	PER
Jamming	Level	-6.4 dBc	Jamming	Frequency	5741400 kHz	PER
Jamming	Level	-6.4 dBc	Jamming	Frequency	5741450 kHz	PER
Jamming	Level	-6.4 dBc	Jamming	Frequency	5741500 kHz	PER
Jamming	Level	-6.4 dBc	Jamming	Frequency	5741550 kHz	PER
Jamming	Level	-6.7 dBc	Jamming	Frequency	5741600 kHz	PER
Jamming	Level	-7.6 dBc	Jamming	Frequency	5741650 kHz	PER
Jamming	Level	-8.7 dBc	Jamming	Frequency	5741700 kHz	PER
Jamming	Level	-7.7 dBc	Jamming	Frequency	5741750 kHz	PER
Jamming	Level	-5.9 dBc	Jamming	Frequency	5741800 kHz	PER
Jamming	Level	-4.2 dBc	Jamming	Frequency	5741850 kHz	PER
Jamming	Level	-2 dBc	Jamming	Frequency	5741900 kHz	PER
Jamming	Level	-2.4 dBc	Jamming	Frequency	5741950 kHz	PER
Jamming	Level	-2.4 dBc	Jamming	Frequency	5742000 kHz	PER
Jamming	Level	-0.6 dBc	Jamming	Frequency	5742050 kHz	PER
Jamming	Level	-1.8 dBc	Jamming	Frequency	5742100 kHz	PER
Jamming	Level	-3 dBc	Jamming	Frequency	5742150 kHz	PER
Jamming	Level	-3.2 dBc	Jamming	Frequency	5742200 kHz	PER
Jamming	Level	-2.8 dBc	Jamming	Frequency	5742250 kHz	PER
Jamming	Level	-2.3 dBc	Jamming	Frequency	5742300 kHz	PER
Jamming	Level	-0.2 dBc	Jamming	Frequency	5742350 kHz	PER
Jamming	Level	-0.2 dBc	Jamming	Frequency	5742400 kHz	PER

Jamming	Level	-0.7	dBc	Jamming	Frequency	5742450	kHz	PER
Jamming	Level	-0.7	dBc	Jamming	Frequency	5742500	kHz	PER
Jamming	Level	0.9	dBc	Jamming	Frequency	5742550	kHz	PER
Jamming	Level	1.6	dBc	Jamming	Frequency	5742600	kHz	PER
Jamming	Level	1	dBc	Jamming	Frequency	5742650	kHz	PER
Jamming	Level	0.5	dBc	Jamming	Frequency	5742700	kHz	PER
Jamming	Level	0.7	dBc	Jamming	Frequency	5742750	kHz	PER
Jamming	Level	1.2	dBc	Jamming	Frequency	5742800	kHz	PER
Jamming	Level	2.6	dBc	Jamming	Frequency	5742850	kHz	PER
Jamming	Level	2.5	dBc	Jamming	Frequency	5742900	kHz	PER
Jamming	Level	3.1	dBc	Jamming	Frequency	5742950	kHz	PER
Jamming	Level	3.3	dBc	Jamming	Frequency	5743000	kHz	PER
Jamming	Level	3.3	dBc	Jamming	Frequency	5743050	kHz	PER
Jamming	Level	3.5	dBc	Jamming	Frequency	5743100	kHz	PER
Jamming	Level	2.9	dBc	Jamming	Frequency	5743150	kHz	PER
Jamming	Level	1.9	dBc	Jamming	Frequency	5743200	kHz	PER
Jamming	Level	1.7	dBc	Jamming	Frequency	5743250	kHz	PER
Jamming	Level	2.4	dBc	Jamming	Frequency	5743300	kHz	PER
Jamming	Level	3.2	dBc	Jamming	Frequency	5743350	kHz	PER
Jamming	Level	3.2	dBc	Jamming	Frequency	5743400	kHz	PER
Jamming	Level	2.2	dBc	Jamming	Frequency	5743450	kHz	PER
Jamming	Level	2.5	dBc	Jamming	Frequency	5743500	kHz	PER
Jamming	Level	3.8	dBc	Jamming	Frequency	5743550	kHz	PER
Jamming	Level	3.8	dBc	Jamming	Frequency	5743600	kHz	PER
Jamming	Level	3.8	dBc	Jamming	Frequency	5743650	kHz	PER
Jamming	Level	3.6	dBc	Jamming	Frequency	5743700	kHz	PER
Jamming	Level	3.6	dBc	Jamming	Frequency	5743750	kHz	PER
Jamming	Level	3.6	dBc	Jamming	Frequency	5743800	kHz	PER
Jamming	Level	5.4	dBc	Jamming	Frequency	5743850	kHz	PER
Jamming	Level	5.7	dBc	Jamming	Frequency	5743900	kHz	PER
Jamming	Level	6.3	dBc	Jamming	Frequency	5743950	kHz	PER
Jamming	Level	6.3	dBc	Jamming	Frequency	5744000	kHz	PER
Jamming	Level	6.2	dBc	Jamming	Frequency	5744050	kHz	PER
Jamming	Level	6.3	dBc	Jamming	Frequency	5744100	kHz	PER
Jamming	Level	6.3	dBc	Jamming	Frequency	5744150	kHz	PER
Jamming	Level	5.7	dBc	Jamming	Frequency	5744200	kHz	PER
Jamming	Level	5.7	dBc	Jamming	Frequency	5744250	kHz	PER
Jamming	Level	5.8	dBc	Jamming	Frequency	5744300	kHz	PER
Jamming	Level	5.9	dBc	Jamming	Frequency	5744350	kHz	PER
Jamming	Level	6.7	dBc	Jamming	Frequency	5744400	kHz	PER
Jamming	Level	5.8	dBc	Jamming	Frequency	5744450	kHz	PER
Jamming	Level	6	dBc	Jamming	Frequency	5744500	kHz	PER
Jamming	Level	7	dBc	Jamming	Frequency	5744550	kHz	PER
Jamming	Level	6.6	dBc	Jamming	Frequency	5744600	kHz	PER
Jamming	Level	6.8	dBc	Jamming	Frequency	5744650	kHz	PER
Jamming	Level	6.9	dBc	Jamming	Frequency	5744700	kHz	PER
Jamming	Level	6.9	dBc	Jamming	Frequency	5744750	kHz	PER
Jamming	Level	7.5	dBc	Jamming	Frequency	5744800	kHz	PER
Jamming	Level	10.6	dBc	Jamming	Frequency	5744850	kHz	PER
Jamming	Level	10.1	dBc	Jamming	Frequency	5744900	kHz	PER
Jamming	Level	9.9	dBc	Jamming	Frequency	5744950	kHz	PER
Jamming	Level	10.3	dBc	Jamming	Frequency	5745000	kHz	PER

8
8
8

8
8
8

8
8
8

8
8
8

8
8
8

8
8
8

8
8
8

the processes being bypassed. In some practical systems, the spread spectrum processing cannot simply be bypassed. In these cases, the processing gain can be indirectly measured by a jamming margin test [2]. In accordance with the new NPRM 99-231, if the vendor has a system with less than 10 chips per symbol, the CW jamming results must be supported by a theoretical explanation of the system processing gain.

Theoretical calculations

The processing gain is related to the jamming margin as follows [2]:

$$G_p = \left(\frac{S}{N}\right)_{output} + \left(\frac{J}{S}\right) + L_{system}$$

Where $BER_{REFERENCE}$ is the reference bit error ratio with its corresponding, theoretical output signal to noise ratio per symbol, $(S/N)_{output}$, (J/S) is the jamming margin (jamming signal power relative to desired signal power), and L_{system} are the system implementation losses.

The maximum allowed total system implementation loss is 2 dB.

The HFA3861A direct sequence spread spectrum baseband processor uses CCK modulation which is a form of M-ary Orthogonal Keying. The BER performance curve is given by [5]:

“ The probability of error for generalized M-ary Orthogonal signaling using coherent demodulation is given by:

$$P_e = 1 - P_{c1} = 1 - \frac{1}{\sqrt{2p}} \int_{-\frac{S_{01}}{N_0}}^{\infty} \left[2\left(1 - Q\left\{ z + \sqrt{2\,\frac{E_b}{h}} \right\}\right) \right]^{\frac{M}{2}-1} \exp\left\{ -\frac{z^2}{2} \right\} dz$$

This integral cannot be solved in closed form, and numerical integration must be used. There are error rate extensions for differential decoding and descrambling that are also to be accounted for. This is done in a MATHCAD environment and is displayed in graphical format below.

1.1 1000 byte PER vs. Es/No

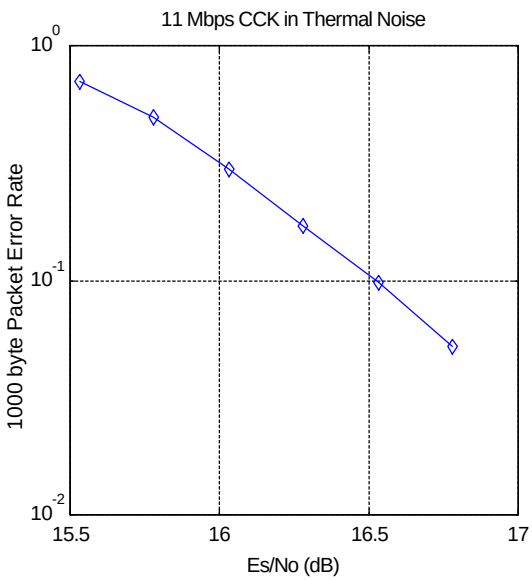

The reference PER is specified as 8%. The corresponding Es/No (signal to noise ratio per symbol) is 16.4 dB. The Es/No required to achieve the desired BER with maximum system implementation losses is 18.4 dB. The minimum processing gain is again, 10 dB, therefore:

$$G_p = \left(\frac{E_s}{N_o}\right)_{output} + \left(\frac{J}{S}\right) + L_{system} = 16.4dB + 2.0dB + \left(\frac{J}{S}\right) \geq 10dB$$

$$G_p = 18.4dB + \left(\frac{J}{S}\right) \geq 10dB$$

The minimum jammer to signal ratio is as follows:

$$\left(\frac{J}{S}\right) \geq -8.4dB$$

For the case of the HFA3861A, the bit rates are 1, 2, 5.5, and 11 Mbps. The corresponding symbol rates are 1, 1, 1.375, and 1.375 MSps. The chip rate is always 11 MCps, so the ratio of chip rate to symbol rate is 11:1 for the 1 and 2 Mbps rates and 8:1 for the 5.5 and 11 Mbps rates. Since the symbol rate to bit rate is less than 10 for the higher rates, we supply the theoretical processing gain calculation for these cases where spread spectrum processing gain with embedded coding gain is utilized. This is reasonable in that they cannot be separated in the demodulation process. If a separable FEC coding scheme were used, we would not be comfortable making this assertion.

As can be seen from the curve of figure 1, the Es/N0 is 16.4 dB at the PER of 8%. This PER can be related to a BER of 1e-5 on 1000 byte packets. With 8 bits per symbol, the Eb/N0 is then 7.4 dB or 9 dB less than the Es/N0. It is well known that the Eb/N0 of BPSK is 9.6 dB for 1e-5 BER, so therefore the coding gain of CCK over BPSK is 2.2 dB. We add this to the processing gain of 9 dB to get 11.2 dB overall processing gain for the CW jammer test.

Taking the calculations above, if the $\left(\frac{J}{S}\right) \geq -8.4\,dB$ then the equipment passes the CW jamming test.

Test Configuration: CW Jamming Margin (15.247) (e)

Basic Test Block Diagram

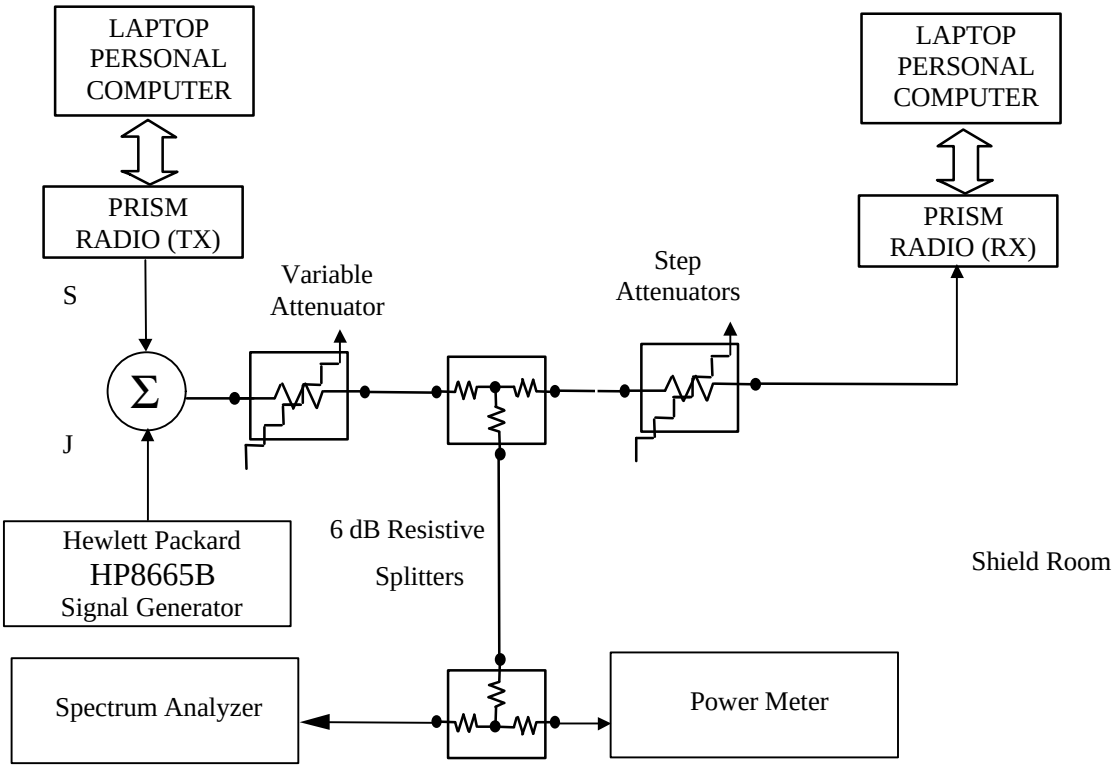

Test Procedure

Setup the simplex link shown. Perform all independent instrumentation calibrations prior to this procedure. Set operating power levels using fixed and variable attenuators in system to meet the following objectives:

- Signal Power at receiver approximately -60 dBm (above thermal sensitivity such that thermal noise does not cause bit errors).
- Signal Power at power meter (using high sensitivity probe) between -20 and -40 dBm for optimal linearity.
- Use spectrum analyzer to monitor test.
- Ensure that CW Jammer generator RF output is disabled and measure the power at the power meter port using the power meter. This is the relative signal power, S_r.

- Disable Transmitter, and set CW Jammer generator RF output frequency equal to the carrier frequency and enable generator output. Set reference CW Jammer power level at power meter port 8.4 dB below S_r (minimum J/S, or 10 dB processing gain reference level). Note the power level setting on the generator, this is the reference CW Jammer power setting, J_r.

- Disable CW Jammer, re-establish link. PER test should be operating essentially error-free.

- Adjust the CW Jammer level to that which causes 8% PER and verify that the J/S is greater than -8.4 dB.

- Repeat step 7 for uniform steps in frequency increments of 50 kHz across the receiver passband with the CW Jammer. In this case the receiver passband is $\pm$8.5 MHz.

The number of points where the J/S fails to achieve -8.4 dB (is less than -8.4 dB) is determined and if this is above 20% of the total, the test is failed otherwise it is passed.