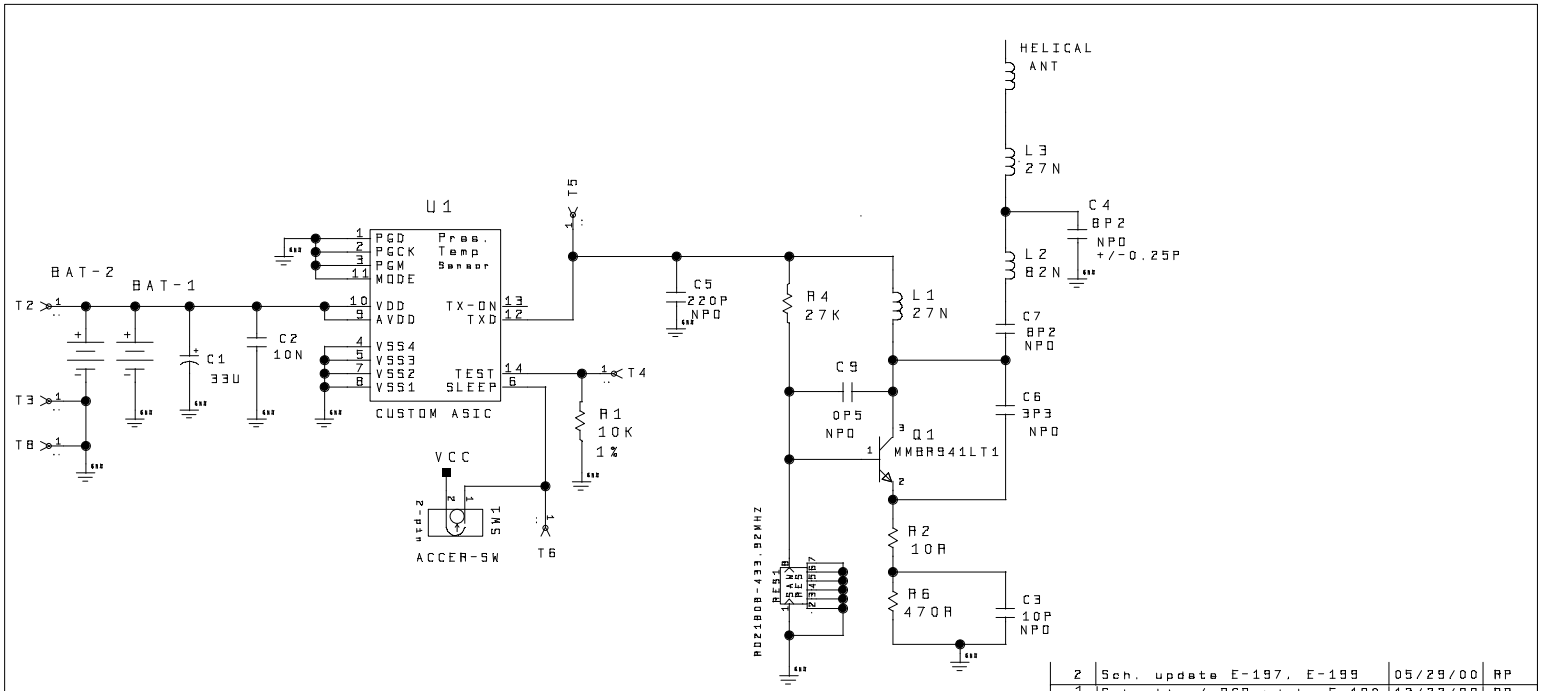

REV	DESCRIPTION	DATE	INIT
2	Sch. update E-197, E-199	05/29/00	RP
1	Schmatic / PCB udate E-180	12/22/99	RP
0	ORIGINAL	01/01/98	J B

SmarTire Systems Inc. © 1997-2000
THIS INFORMATION IS PROPRIETARY AND MUST NOT BE COPIED AND/OR REVEALED TO THIRD PARTIES WITHOUT THE WRITTEN CONSENT OF SMARTIRE SYSTEMS INC.

DRAWN	CHECKED	DESIGNER	MANAGER
JB		SL	SL

TITLE VALVE MOUNT SENSOR

WHEEL SENSOR 433MHz-SM (custom asic)

LAST EDITED 05/31/00

DWG NO. 210.0137ESC0.1 REV 2

PCB: 215-0045

PROTO ☐ PILOT ○ PROD ○ SHEET1 OF 1