REVISION RECORD			
Ver	ECO/Reason	APPRDVED	DATE
0	Release for production		

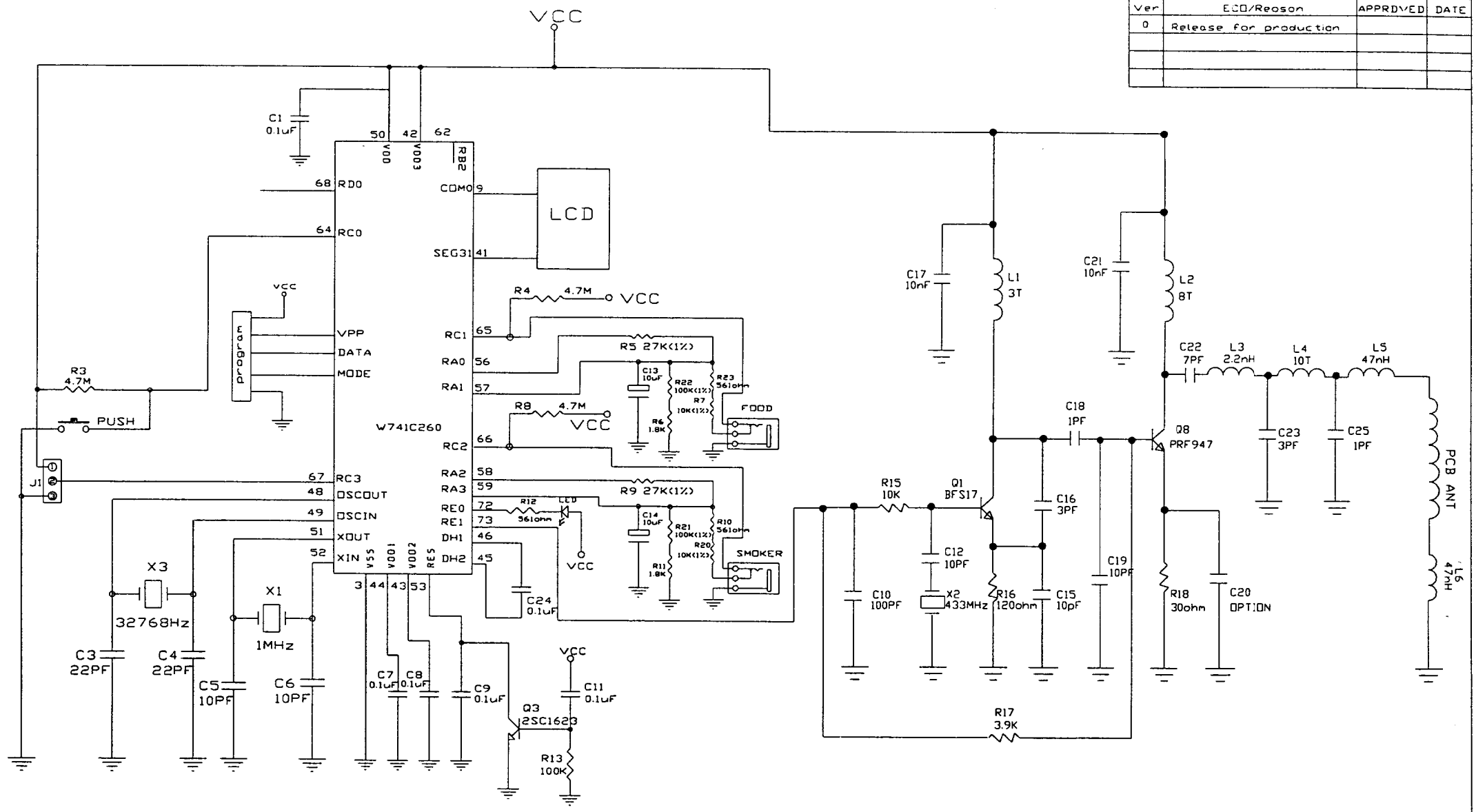

DESIGN:	APR.30.2003	EWIG Industries Co.LTD			
CHECKED:	APR.30.2003	Model No	693200	PCB NO	REV: 0
APPROVAL:	APR.30.2003	File Name	693200SC	PAGE No	1 OF 1