REVISION RECORD			
VER	ECO/REASON	APPROVAL	DATE
1	Release For Production		

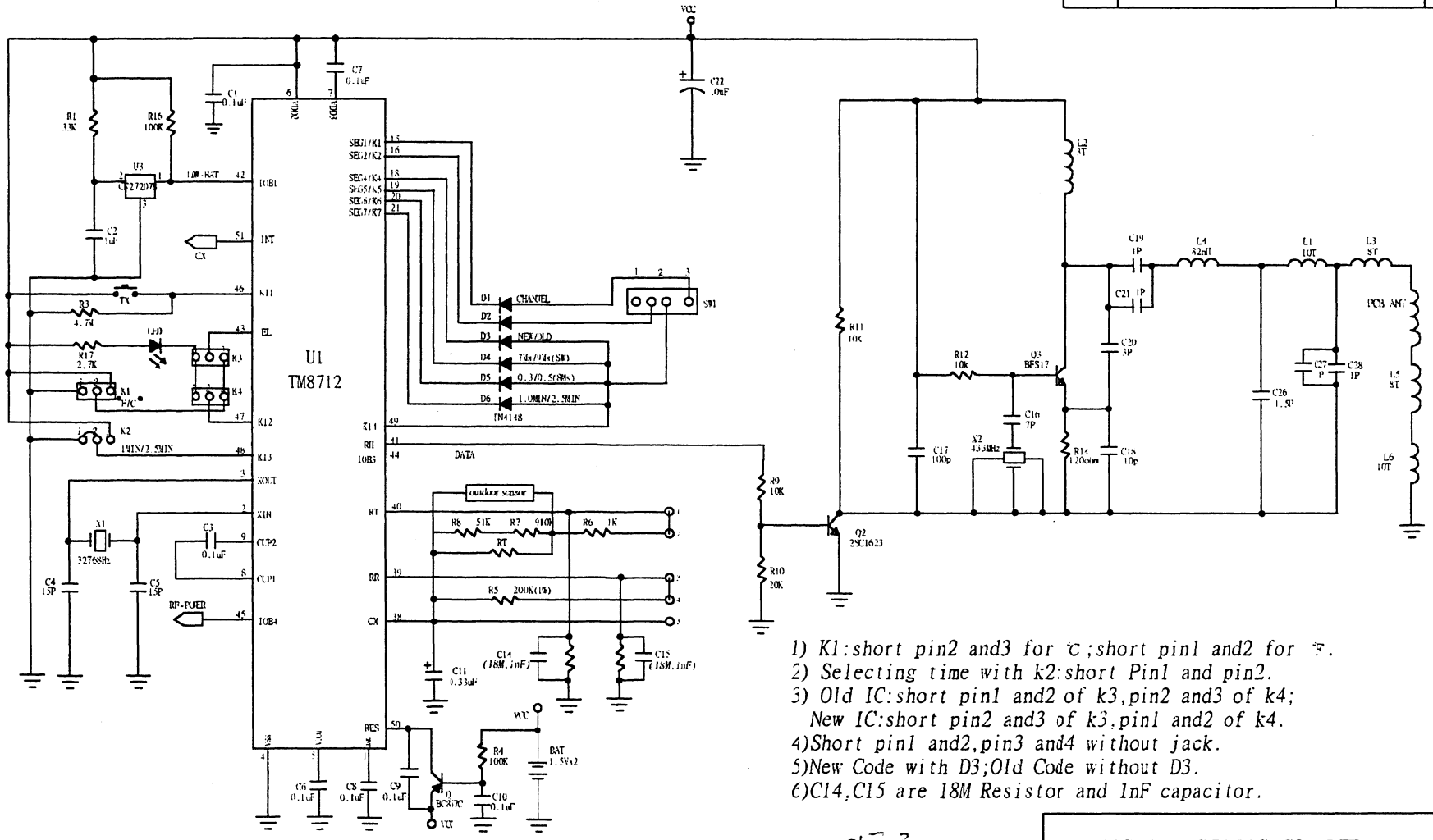

1) K1:short pin2 and3 for ℃;short pin1 and2 for ℉.
2) Selecting time with k2:short Pin1 and pin2.
3) Old IC:short pin1 and2 of k3,pin2 and3 of k4;
New IC:short pin2 and3 of k3,pin1 and2 of k4.
4)Short pin1 and2,pin3 and4 without jack.
5)New Code with D3;Old Code without D3.
6)C14,C15 are 18M Resistor and 1nF capacitor.

DESIGN:		DATED:	EWIG INDUSTRIES CO. LTD.			
CHECKED:		DATED:	MODEL NO.	687000	PCB NO.	REV:1
APPROVAL:		DATED:	FILE NAME:	687000	PAGE NO.	1 OF 1

2003/4/10